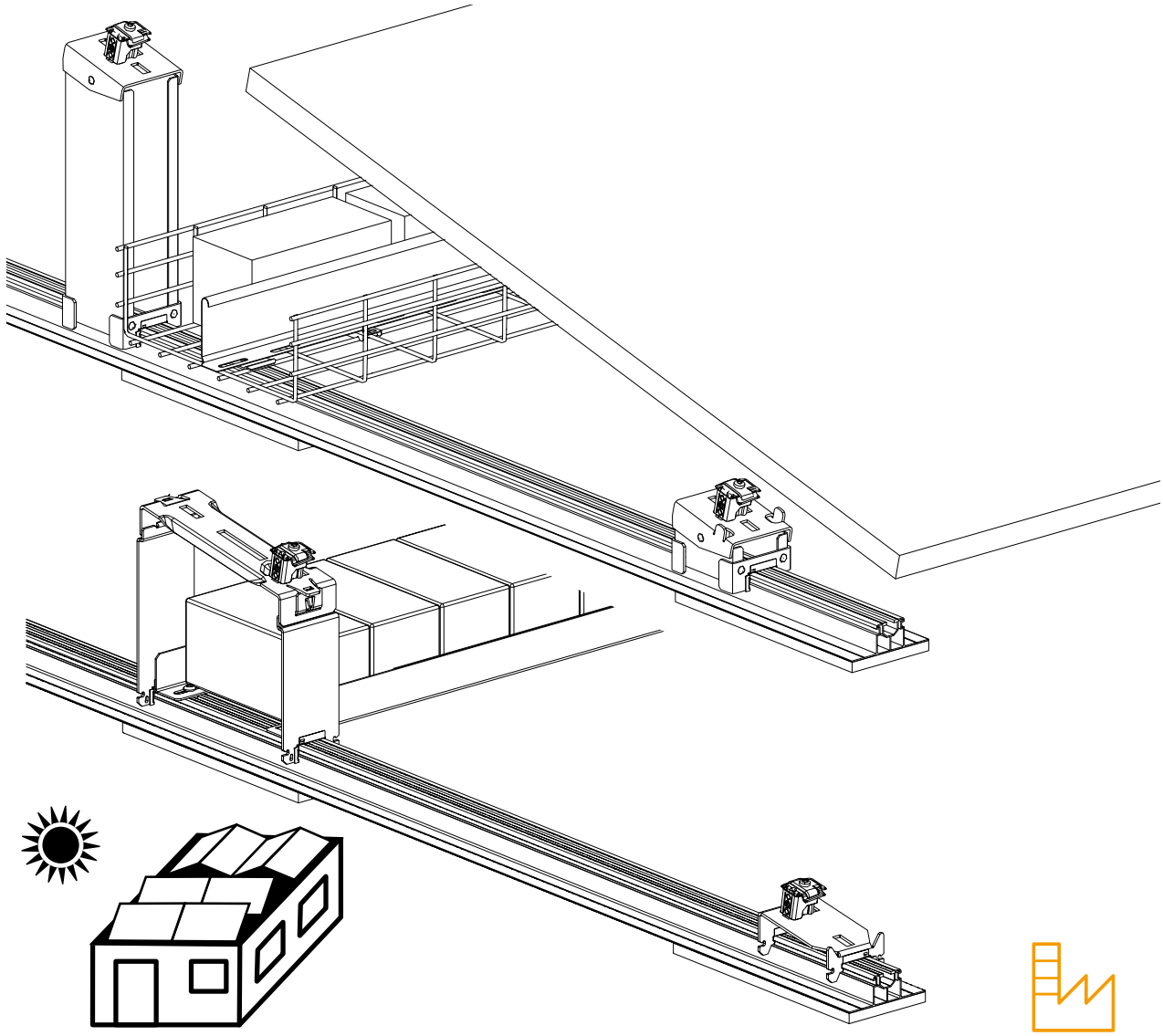

Mounting instructions

Magic PV Flat Basic PV mounting systems

OBO BETTERMANN

© 2026 OBO Bettermann Holding GmbH & Co. KG

Table of contents

1 About these instructions ... 6

1.1 Target group ... 6
1.2 Relevance of these instructions ... 6
1.3 Types of warning information ... 6
1.4 Depiction conventions ... 7
1.5 Basic standards and regulations ... 7
1.6 Applicable documents ... 7

2 Intended use ... 7

3 Safety ... 8

3.1 General safety information ... 8
3.2 Personal protective equipment ... 8

4 Necessary tools ... 9

5 System overview ... 9

5.1 System description ... 9
5.2 Overview of different system structures/variants ... 10
5.3 System components ... 12
5.4 Accessories ... 14

6 Mount the system ... 15

6.1 Establishing spacing with distance gauge ... 15
6.2 Shortening truss profiles ... 18
6.3 Connecting truss profiles lengthwise ... 18
6.4 Inserting the supports ... 19
6.4.1 Inserting supports for angle of inclination of 13.5° to 15.6° ... 19
6.4.2 Inserting supports for angle of inclination of 10° ... 20
6.5 Ballasting the system ... 22
6.5.1 System ballasting with mesh cable tray ... 22
6.5.2 System ballasting with ballast support plates ... 25
6.5.3 System ballasting with ballast rails ... 27
6.6 Positioning PV modules ... 30
6.7 Adjusting the angle of inclination of supports STK/STL ... 32
6.8 Fastening PV modules with universal clamps, angle of inclination 13.5°–15.6°, supports STK/STL ... 33
6.8.1 Fastening the PV module with end clamps at the sides ... 33
6.8.2 Fastening PV module with middle clamps ... 35
6.8.3 Fastening PV module at the top and bottom ... 36
6.9 Fastening the PV module with end/intermediate clamps with springs, angle of inclination 13.5°–15.6°, supports STK/STL ... 37
6.9.1 Fastening the PV module with end clamps with springs at the sides ... 38
6.9.2 Fastening PV modules with intermediate clamps with springs ... 39
6.9.3 Fastening the PV module with end clamps with springs at the top and bottom ... 40
6.10 Fastening PV modules with universal clamps, angle of inclination 10°, supports STK AD/STLOW AD/STLS AD ... 43
6.10.1 Fastening the PV module with end clamps at the sides ... 44
6.10.2 Fastening PV module with middle clamps ... 45

6.10.3 Fastening PV module at the top and bottom 47
6.11 Fastening the PV module with end/intermediate clamps with springs, angle of inclination 10°, supports STK AD/STLOW AD/STLS AD 48
6.11.1 Fastening the PV module with end clamps with springs at the sides 48
6.11.2 Fastening PV modules with intermediate clamps with springs 50
6.11.3 Fastening the PV module with end clamps with springs at the top and bottom 51
6.12 Replacing the PV module 53
6.12.1 Replacing with side and middle fastening 53
6.12.2 Replacing with top and bottom fastening 54
6.13 Mounting the windbreak 55
6.13.1 Mounting windbreak WSB 2200 to supports STL 55
6.13.2 Mounting windbreak WSB 2200 AD to supports STLS AD 56
6.14 Integrating the system into the equipotential bonding and/or lightning protection system 57

7 Maintaining the system 59

8 Dismantling the system 60

8.1 Dismantling the supports 60
8.1.1 Dismantling supports STK/STL 60
8.1.2 Dismantling supports STK AD, STLS AD and STLOW AD 62
8.2 Dismantling the ballast support plate 64

9 Disposing of the system 64

10 Technical data 65

1 About these instructions

1.1 Target group

– These instructions are intended for specialists and/or instructed technical personnel (e.g. roofers, solar panel installers, engineers, architects, construction managers, mounting engineers, installation engineers), who have been trained in the mounting of photovoltaic systems and have been charged with the mounting of PV mounting systems.

– Only have electrical work, such as the connection and earthing of the systems, carried out by specialist personnel with electrical training.

1.2 Relevance of these instructions

These instructions are based on the standards valid at the time of compilation (April 2026).

Please read the instructions carefully before commencing mounting. We will not accept any warranty claims for damage and liability caused through non-observance of these instructions.

Any images are intended merely as examples. Mounting results may look different.

1.3 Types of warning information

WARNING

Type of risk!
Shows a risky situation. If the warning information is not observed, then serious or fatal injuries may occur.

CAUTION

Type of risk!
Shows a risky situation. If the warning information is not observed, then medium or minor injuries may occur.

ATTENTION

Type of risk!
Shows a risky situation. If the warning information is not observed, then damage to the product or the surroundings may occur.

Note! *Indicates important information or assistance.*

1.4 Depiction conventions

Explanation of the depictions used:

Correct design

Incorrect design

1.5 Basic standards and regulations

DIN EN 62305 (VDE 0185-305)

DIN VDE 0100-712

DIN EN 61643-32

1.6 Applicable documents

The declarations of conformity are linked to the products at www.obo-bettermann.com.

2 Intended use

The Magic PV Flat Basic photovoltaic mounting systems for flat roofs are used for the mounting of photovoltaic modules with a height of 30–50 mm on flat roofs with a bitumen seal or sealing with plastic membranes. The roof inclination must be < 3°. With roofs with an inclination of > 3°, an individual case study is essential. The systems are suitable for accepting modules with widths of 992–1,134 mm and lengths of 1,640–2,135 mm. Depending on the selection of the supports and the size of the modules, the modules can be mounted in an east-west configuration or in a southerly direction with an angle of inclination of 10° or from 13.5 to 15.6°. The truss profiles for the PV modules can be connected up to a maximum length of 20 m, in order to guarantee thermal separation. The mounting systems are not intended for securing people with belts or ropes during roofing work.

The mounting systems are not designed for any purpose other than the one described here. If the photovoltaic mounting systems are used for another purpose, any liability, warranty or damage claims shall be rendered null and void.

3 Safety

3.1 General safety information

Observe the following general safety information:

- It must be ensured that the planned PV system is intended for the load capacity of the roof. If necessary, consult a statics expert.
- The PV system and its ballasting must be matched to the local wind and snow load zones. Design only according to the planning using the OBO Construct app or a technical planner.
- Before commencing mounting, ensure that the materials such as the roof skin and insulation materials of the roof surface are suitable for accepting a PV system.
- The construction site must be protected against falling objects.
- Mounting must be carried out by at least two people.
- The people working must be protected as there is a risk of falling when working high above the ground.
- When working on the roof, care must be taken to avoid damaging the roof skin and insulation of the roof.
- Contact with electrical current can lead to an electric shock. Electrical work may only be performed by qualified specialists.
- Protective clothing must be worn as there is a danger of cutting from sharp profile edges and a risk of injuries to the eyes from flying chips when working with the angle grinder.

3.2 Personal protective equipment

List of personal protective equipment to be used:

Use hand protection

Wear safety shoes

Wear eye protection

Use catch protection

4 Necessary tools

List of tools to be used:

- Folding ruler/tape measure
- Chalk line
- Angle grinder
- Battery-operated screwdriver (Torx 30/40, Inbus 6)
- Torque spanner (WAF 13)
- Screwdriver (Torx 30/40, Inbus 6)

5 System overview

5.1 System description

The Magic PV Flat Basic photovoltaic mounting systems (PV mounting systems) for flat roofs consist of:

- Aluminium truss profiles with anti-slip coating on the underside
- Short and long supports for angle of inclination of 13.5° to 15.6°
- Short and long supports for angle of inclination of 10°, long support supplied folded up
- Universal clamps as end or middle clamps, or
- End and intermediate clamps with springs for larger contact surface for modules
- Windbreaks for systems facing south
- Mesh cable trays for ballasting and cable routing
- Ballast support plates for ballasting
- Ballast rails for ballasting.

The truss profiles are placed on the roof; the coating on the underside protects the roof skin and prevents the system from slipping. The truss profiles can be connected using straight connectors. Short and long supports are snapped onto the truss profiles, and the PV modules onto them. The PV modules are fastened with the universal clamps or end/intermediate clamps with springs. Fastening is possible both at the sides on the short edges of the module or as a quarter-point fastening on the top and bottom edges of the module. The system is weighed down using standard blocks that are placed on mesh cable trays, ballast support plates or ballast rails. The ballasting is placed below the modules on the truss profiles. The mesh cable trays are also used for cable routing.

5.2 Overview of different system structures/variants

System structure, side fastening for angle of inclination 13.5° to 15.6°

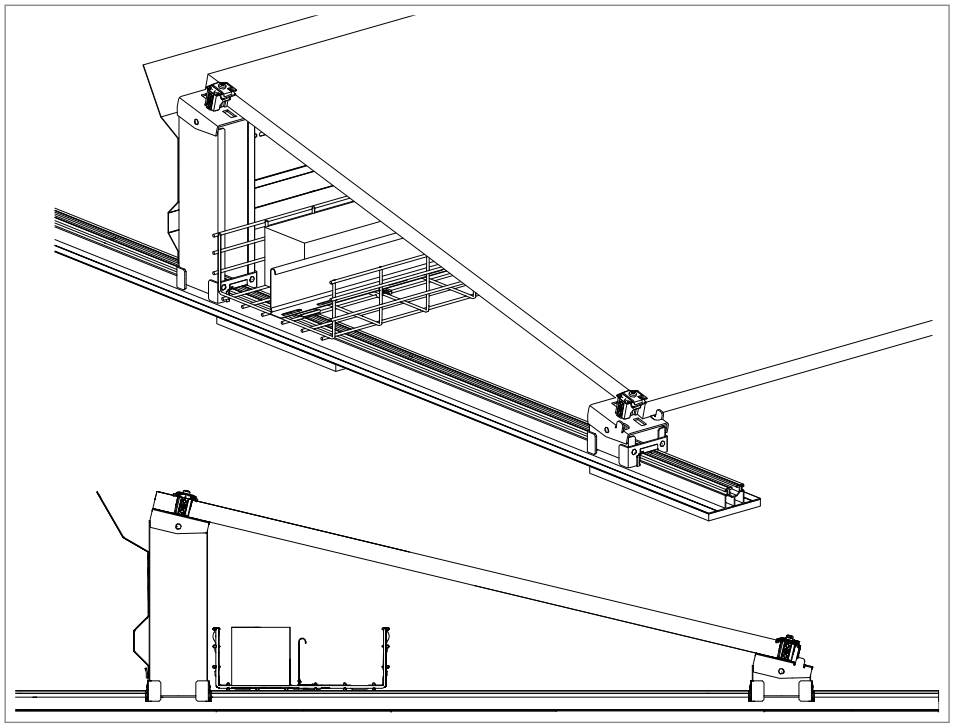

Fig. 1: System structure, side module fastening, supports STK and STL

System structure, fastening top/bottom for angle of inclination 13.5° to 15.6°

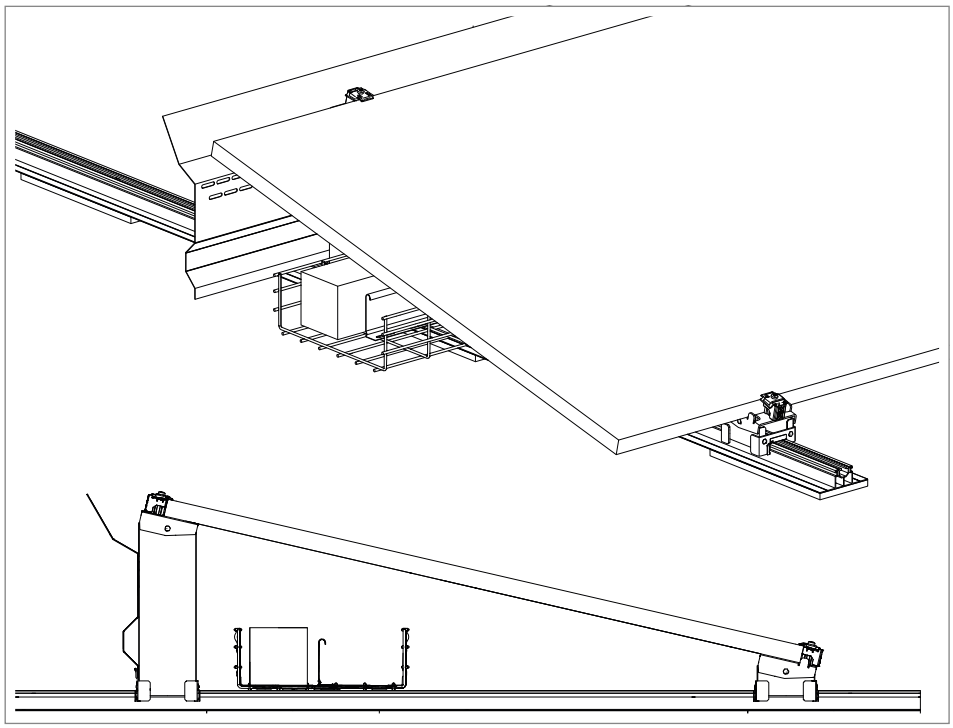

Fig. 2: System structure, module fastening top/bottom, supports STK and STL

System structure, side fastening for angle of inclination 10°

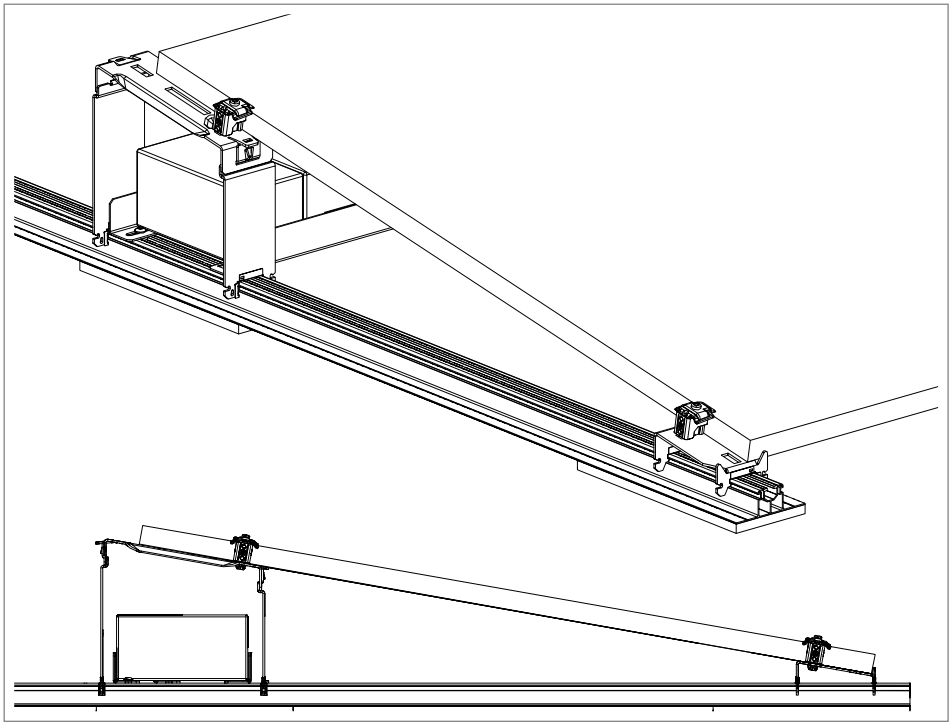

Fig. 3: System structure, side module fastening, supports STK AD and STLOW AD

System structure, fastening top/bottom for angle of inclination 10°

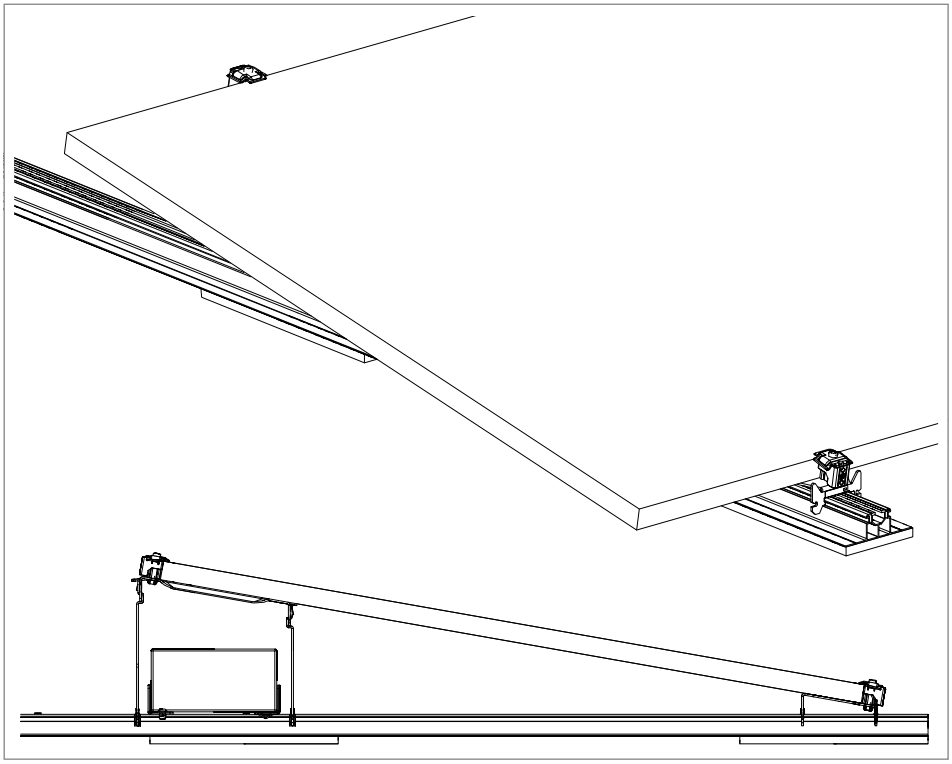

Fig. 4: System structure, module fastening top/bottom, supports STK AD and STLOW AD

Note! *The components of the systems with the long supports STLOW AD for east-west orientation and STLS AD for south orientation are mounted in the same way. Windbreaks are additionally mounted to the STLS AD supports.*

5.3 System components

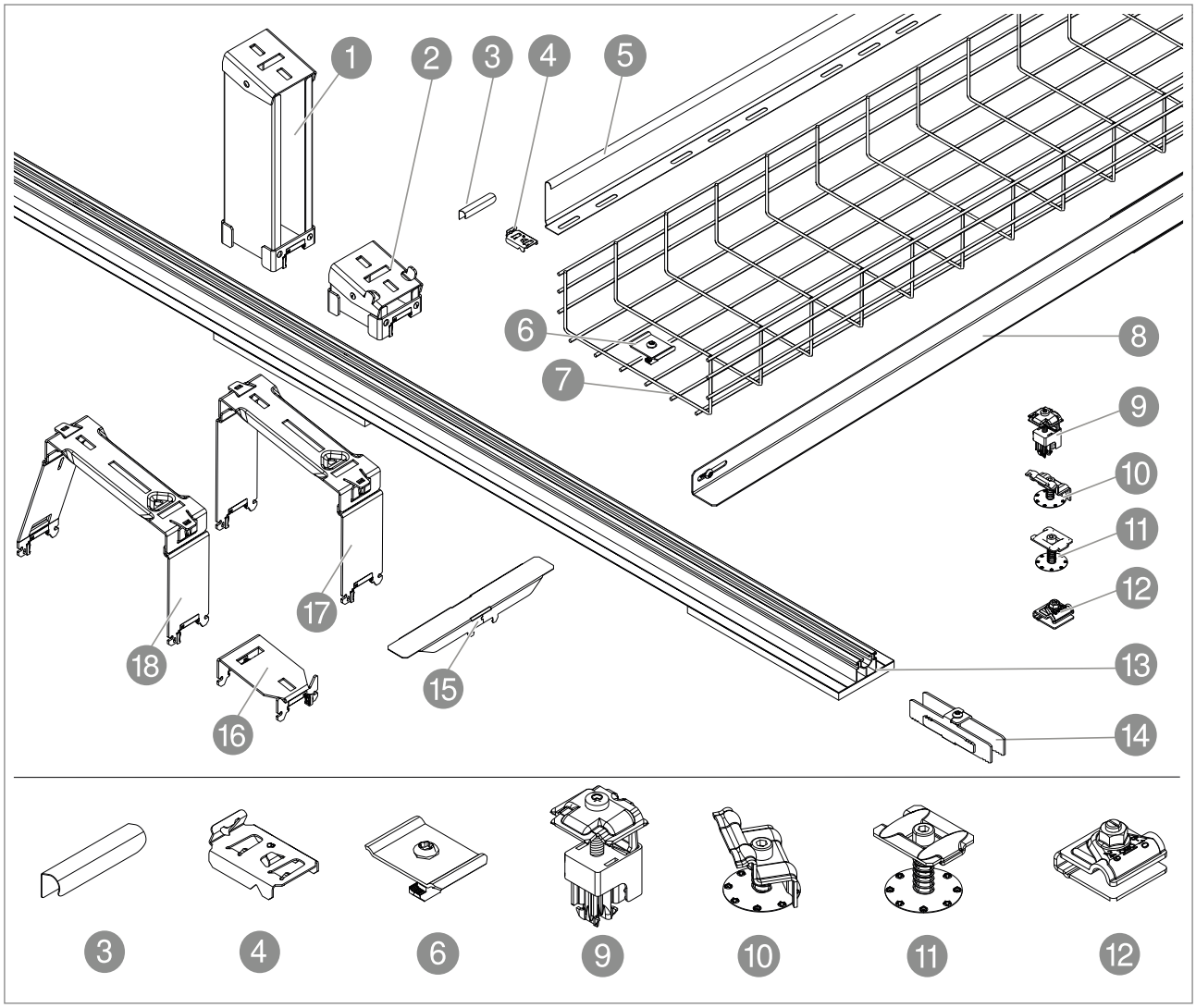

Fig. 5: System components

	Designation	Type	Function
1	Support, long	STL 15 DD	Pitched stand-off and support for PV module, angle of inclination 13.5°–15.6°, fastening on truss profile
2	Support, short	STK DD	Pitched stand-off and support for PV module, angle of inclination 13.5°–15.6°, fastening on truss profile
3	Barrier strip connector	TSGV A2	Straight connection of barrier strips, all side heights
4	Hold-down clamp for mesh cable tray	KS GR A2	Barrier strip fastening
5	Barrier strip	TSG 45 DD TSG 85 DD	Separation of ballasting and cables in mesh cable tray
6	Fastening set for mesh cable trays	BF GR	Fastening of mesh cable tray GRM on truss profile
7	Mesh cable tray	GRM 55 (200-600) FT GRM 105 (200-600) FT	Support for ballasting and cables
8	Ballast rail	BAS	Support for ballasting
9	Universal clamp	KLU A2/KLU A2 S	Fastening of PV modules on supports
10	End clamp with spring	KLE F 25 A2 KLE F 30 A2 KLE F 35 A2 KLE F 40 A2	Fastening of PV modules on supports, offering larger contact surface for modules
11	Intermediate clamp with spring	KLZ F 25 A2 KLZ F 30 A2 KLZ F 35 A2 KLZ F 40 A2	Fastening of PV modules on supports, offering larger contact surface for modules
12	Universal earthing terminal PV	249 PV10 6-50V2A	Creation of equipotential bonding
13	Truss profile	TPF 35 5000 ALU	Support and mounting rail for PV modules
14	Straight connector	LV 35 DD	Straight connection of truss profiles
15	Ballast support plate	BTB	Support for ballasting
16	Short support	STK AD DD	Pitched stand-off and support for PV module, angle of inclination 10°, fastening on truss profile
17	Long support, east-west	STLOW AD DD	Pitched stand-off and support for PV module, angle of inclination 10°, fastening on truss profile
18	Long support, south	STLS AD DD	Pitched stand-off and support for PV module, angle of inclination 10°, fastening on truss profile

Tab. 1: System components

5.4 Accessories

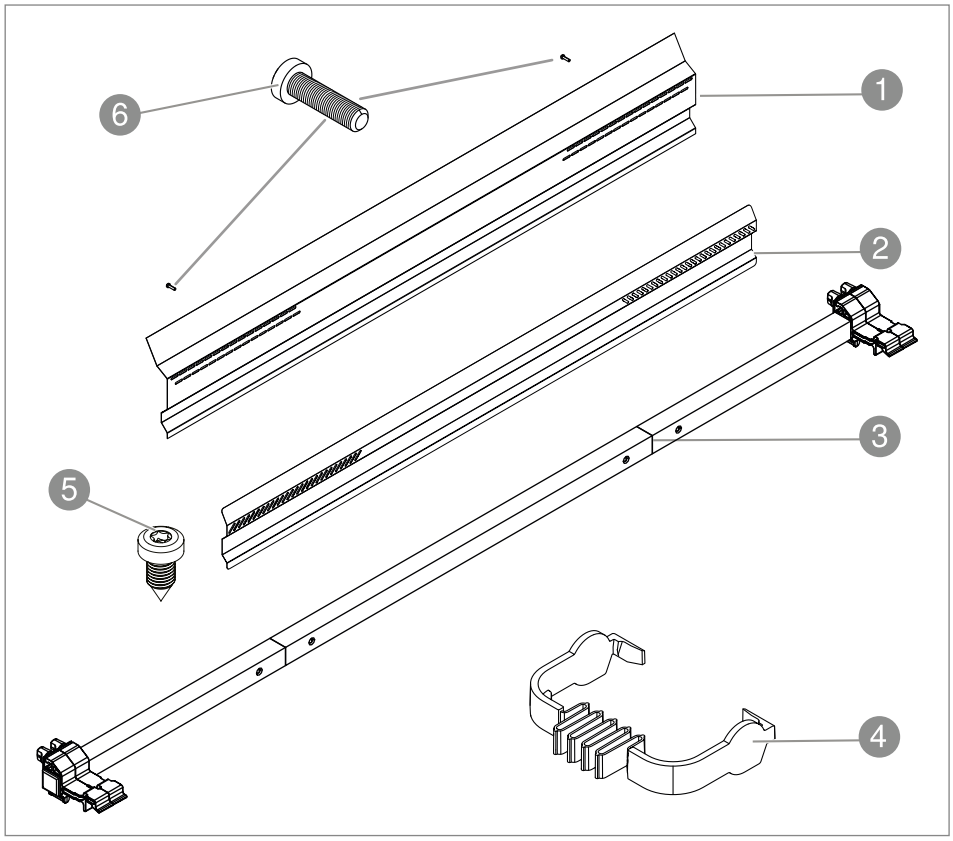

Fig. 6: Accessories

	Designation	Type	Function
1	Windbreak	WSB 2200 DD	Protection against wind load/wind pressure, for mounting to support STL
2	Windbreak	WSB 2200 AD DD	Protection against wind load/wind pressure, for mounting to support STLS AD
3	Distance gauge	AASL FD	Transfer even spacing between truss profiles and between supports
4	Dismantling tool	Does not need to be ordered separately, included with the truss profiles	Release of the short and long supports from the truss profile
5	Screw, self-tapping	STS 6.3x16C A2	Fastening of windbreak WSB 2200 AD DD to long support
6	Flat-head screw	FKS 6x25 A2	Fastening of windbreak WSB 2200 DD to long support

Tab. 2: Accessories

6 Mount the system

ATTENTION

Danger of breakage and function loss!
PV modules can be lifted from below through the effect of wind. There is the danger of breakage and function loss. Maintain the spacings between the modules, as intended in the planning, along with the planned ballasting.

ATTENTION

Risk of shading!
If, with a southerly alignment, the PV modules are mounted too close to one another, there is the risk of mutual shading and thus reduced power yields. Maintain the spacings between the modules, as intended in the planning.

The selection, number and arrangement of the individual system components and PV modules, as well as the system ballasting, are specified by the roof assignment plan from the planner/statics engineer and/or the OBO Construct planning app. These specifications must be complied with.

6.1 Establishing spacing with distance gauge

The spacings between the truss profiles and between the supports can be established evenly using the distance gauge. The module widths and lengths are set on the distance gauge and then transferred to the profiles and support spacings.

Note! *Different contact surfaces must be used to measure the module widths, depending on the clamp type used (KLU or KLE F/KLZ F).*

Setting support spacings between two truss profiles

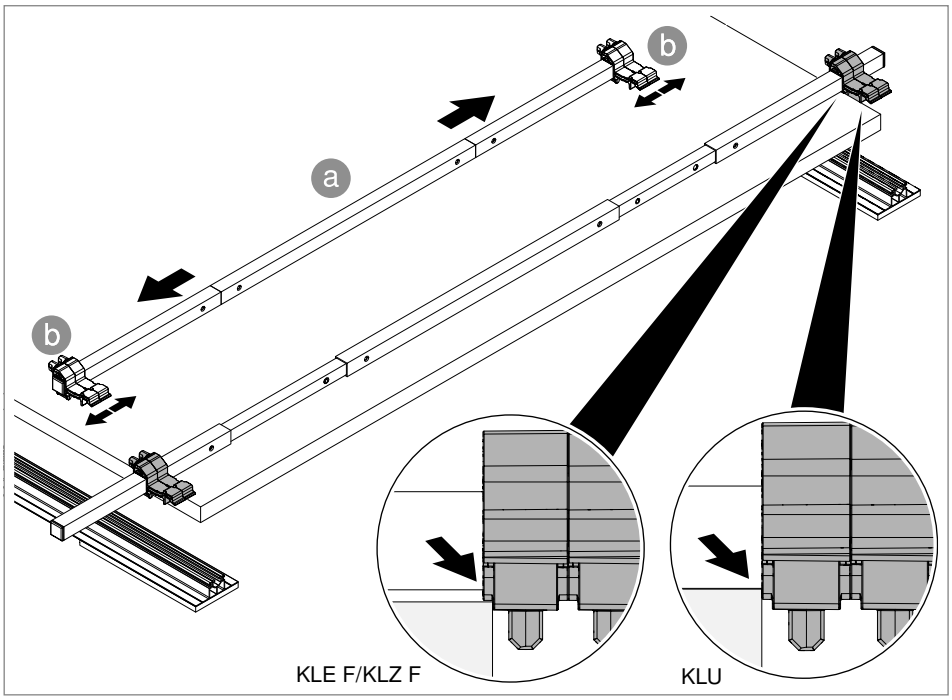

Fig. 7: Set distance gauge to module width

1. Set the distance gauge with telescopic extension ⓐ and the infinitely adjustable spacers ⓑ to the length of the module. Pay attention to the clamp type KLU or KLE F/KLZ F used later.

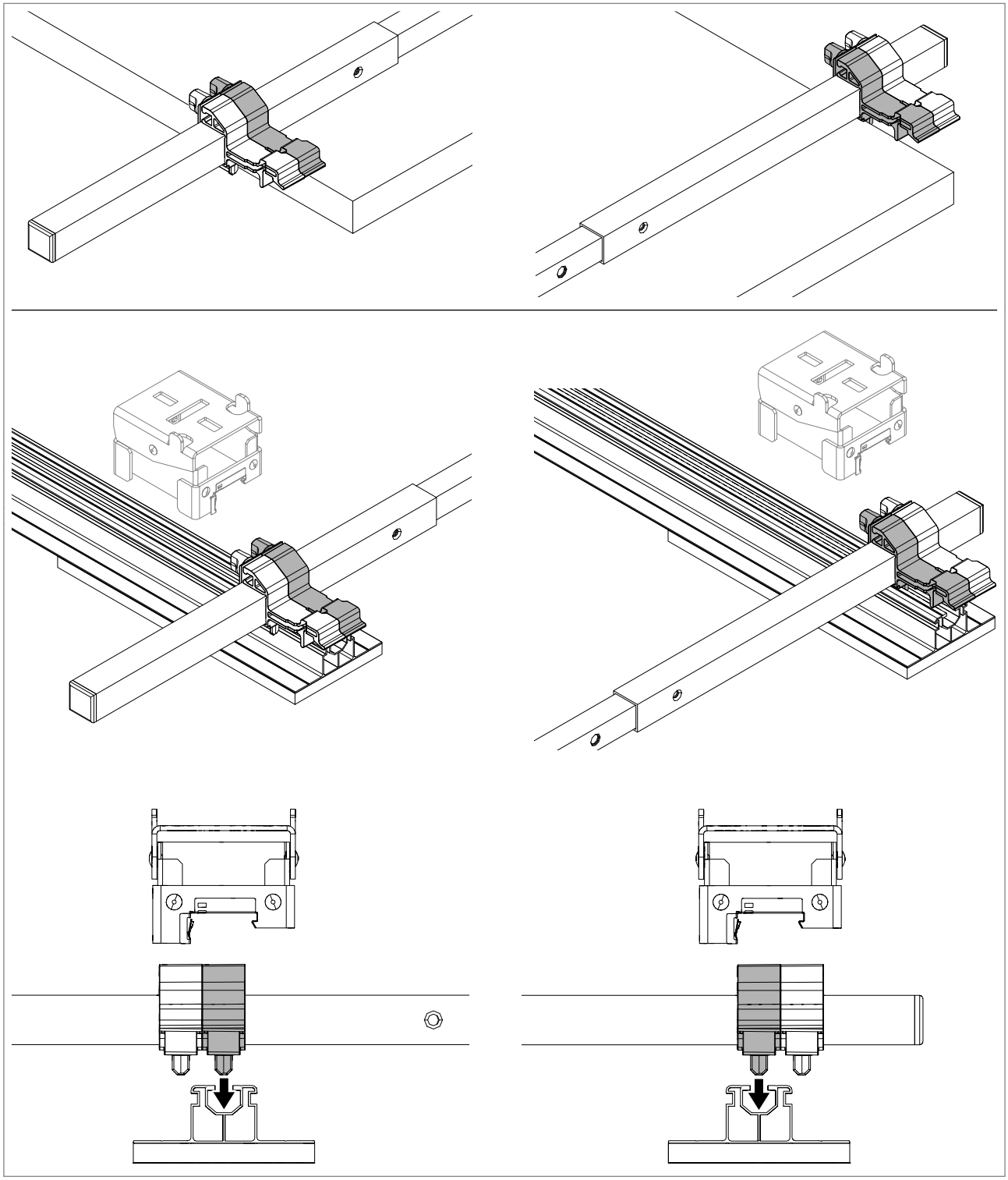

Fig. 8: Transfer set module width to truss profiles

2. Insert spacers into the truss profiles on the left and right to establish the exact spacing between the profiles and supports.

Setting support spacings on a truss profile

Refer to the planning of the PV system for the support spacings X between short and long supports.

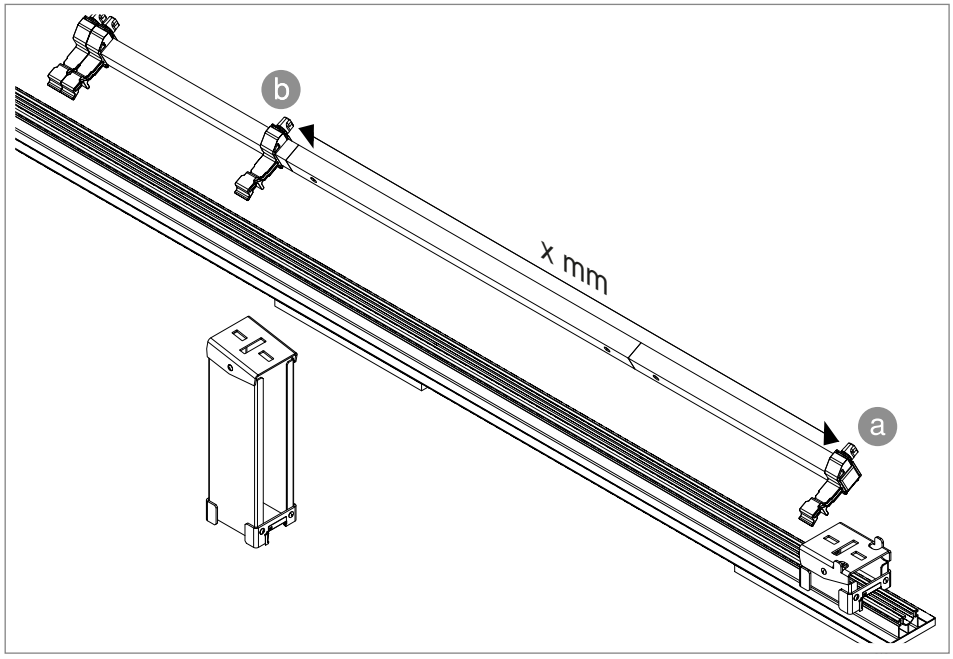

Fig. 9: Setting spacing between supports

1. Set spacing x between the supports using spacers a and b.

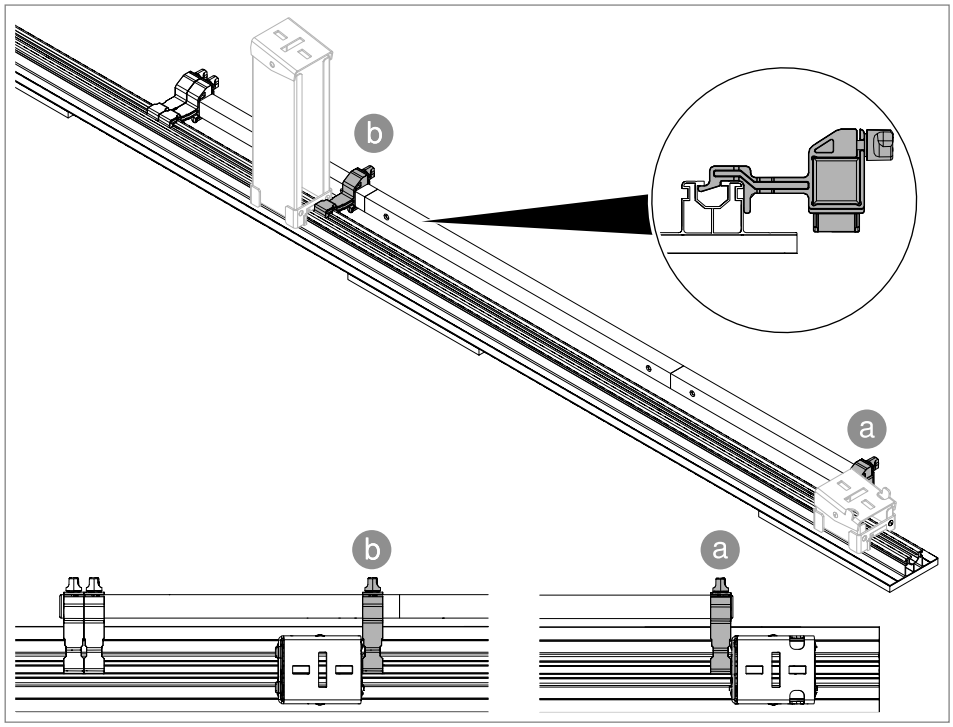

Fig. 10: Aligning the support spacings using the distance gauge

2. Hook the distance gauge into the truss profile. Spacer a is positioned directly behind the short support. Spacer b is positioned directly in front of the long support (see „1.1 Target group“ on page 6).

6.2 Shortening truss profiles

It may be necessary to shorten truss profiles.

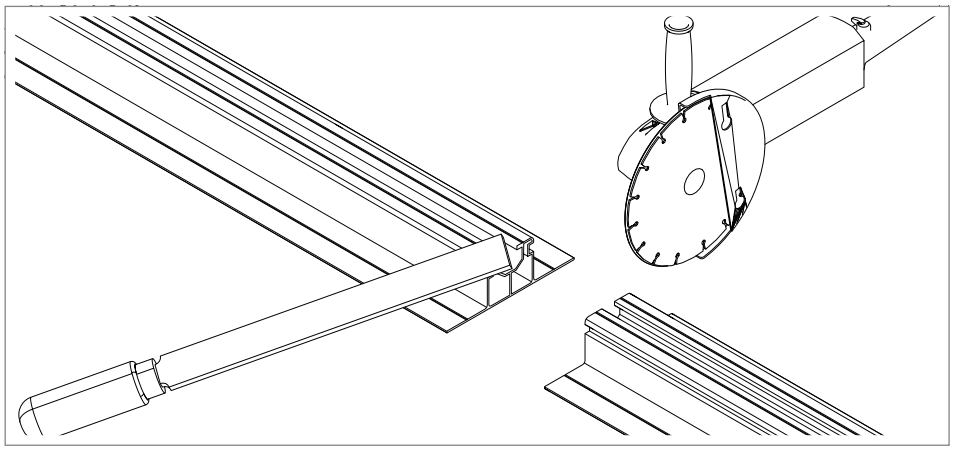

Fig. 11: Shortening truss profiles

3. Using an angle grinder, shorten the truss profile to the prescribed length.

4. Deburr cut edges.

6.3 Connecting truss profiles lengthwise

Truss profiles can be connected lengthwise using straight connectors of type LV 35 DD.

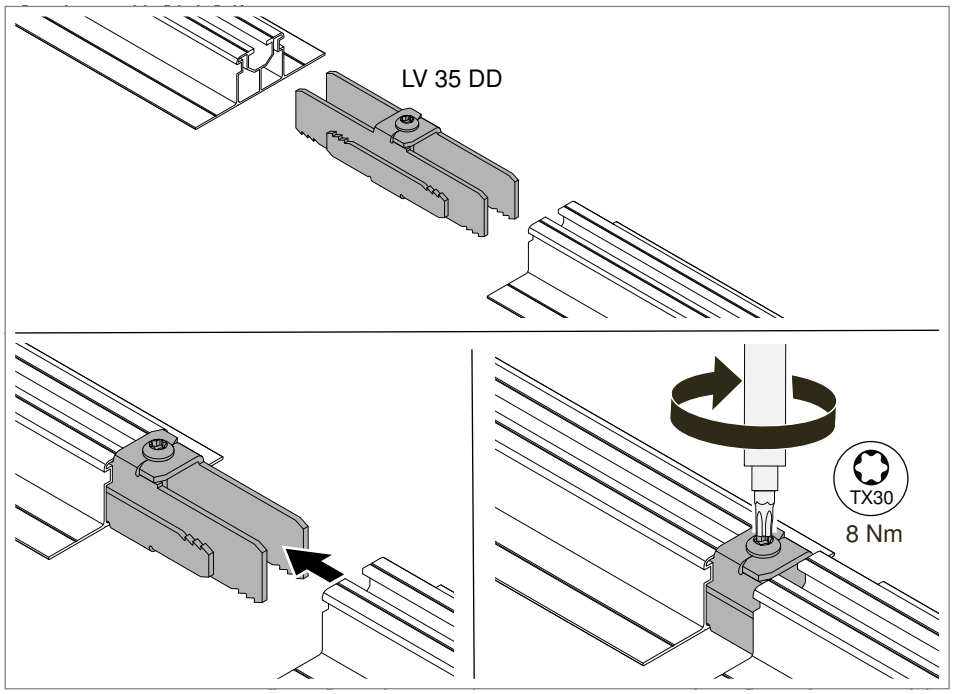

Fig. 12: Mounting a straight connector

1. Push the straight connector into the truss profiles until it hits the profile edges.

2. Tighten the straight connector screw with 8 Nm.

6.4 Inserting the supports

Short and long supports are used to support the truss profiles. Refer to the planning of the PV system for the type of support used.

The supports STK (short) and STL (long) can be used both for south and east-west orientations. They can be used to set an angle of inclination of 13.5° to 15.6°.

By contrast, short supports STK AD are mounted with long supports STLS AD for south orientation and with long supports STLOW AD for an east-west orientation of the PV modules. They can be used to set an angle of inclination of 10°.

Note! *The position of the short and long supports is dependent on the size of the modules and the points in which the universal clamps must be placed. Refer to the planning of the PV system or the OBO Construct planning app for the exact position.*

Note! *The supports are fixed on the rail after they are engaged and cannot be moved. They can be released again using a dismantling tool (see also Chapter „8.1 Dismantling the supports“ on page 60).*

6.4.1 Inserting supports for angle of inclination of 13.5° to 15.6°

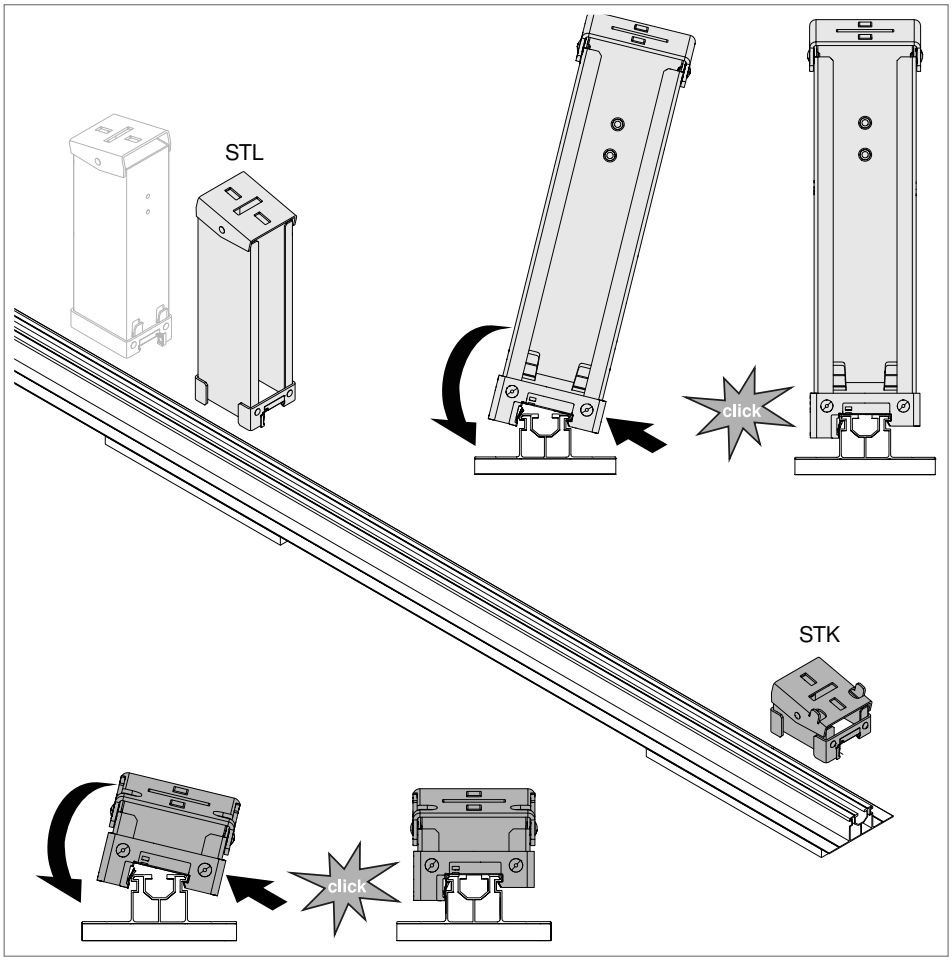

Fig. 13: Inserting supports STK and STL

1. Hook the short and long supports into the truss profile using the short side (↖).
2. Engage the support in the truss profile using the long side (↙).
3. Insert all further supports into the truss profiles in the same way.

6.4.2 Inserting supports for angle of inclination of 10°

Note! *The long supports STLS AD and STLOW AD are inserted in the same way.*

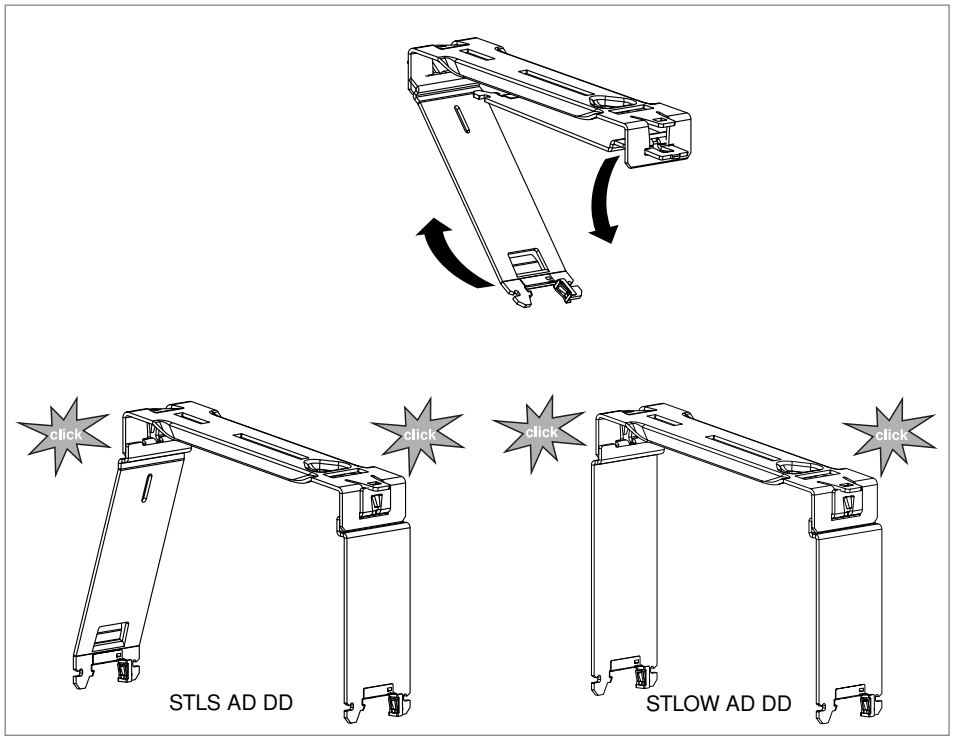

Fig. 14: Opening supports

1. Fold out the long supports until they audibly click into place.

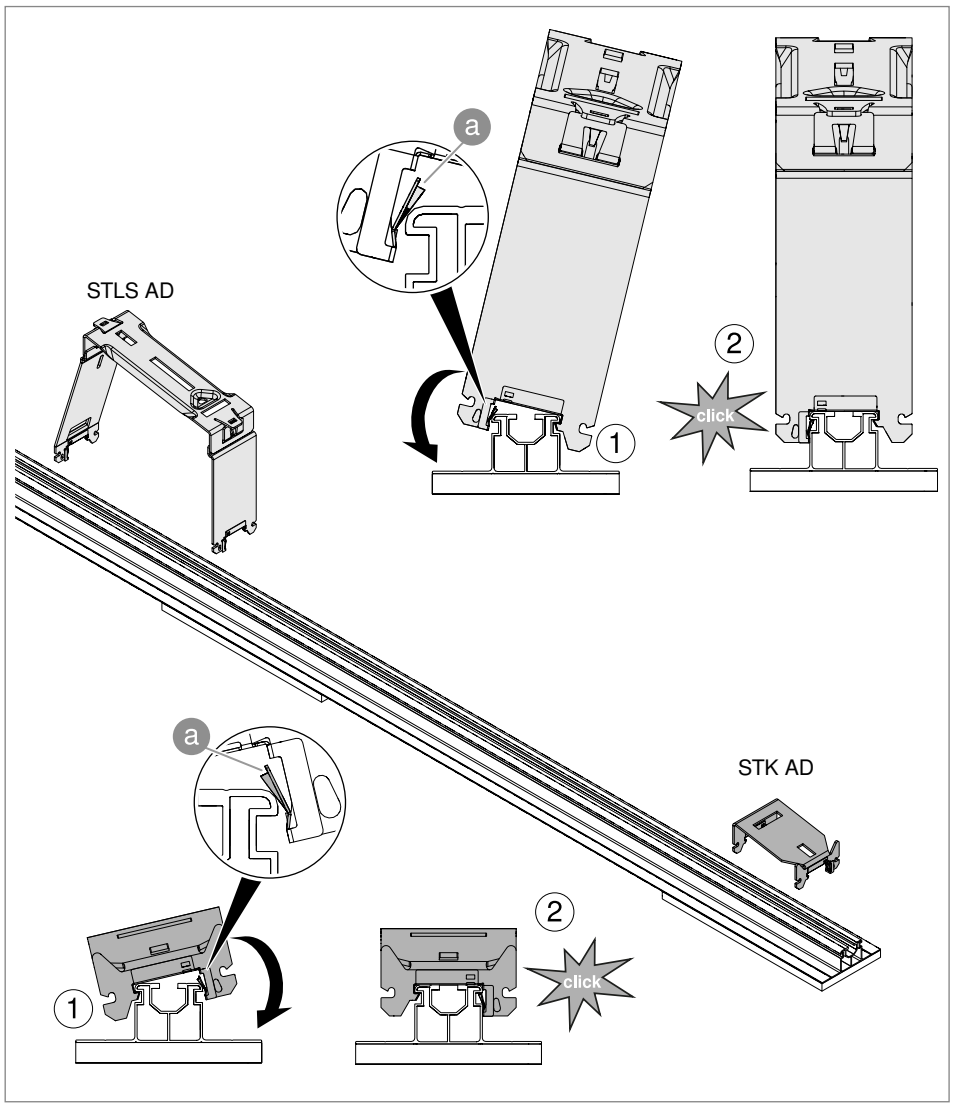

Fig. 15: Inserting supports STK AD and STLS AD

1. Hook the supports into the truss profile, using the support side without spring ⓐ. **Attention**: The spring is not located on the same side of the short and long supports.

2. Engage the support into the truss profile using the spring side.

3. Insert all further supports into the truss profiles in the same way.

6.5 Ballasting the system

Three alternatives are available for ballasting the system. Ballasting with:

– Mesh cable trays and blocks

– Ballast rails and blocks

– Ballast support plates and blocks

If using the mesh cable tray, it is also possible to route cables. The tray is divided using barrier strips.

6.5.1 System ballasting with mesh cable tray

Mounting the mesh cable tray using the fastening set

The mesh cable trays are fastened to the truss profile with the BF GR fastening set.

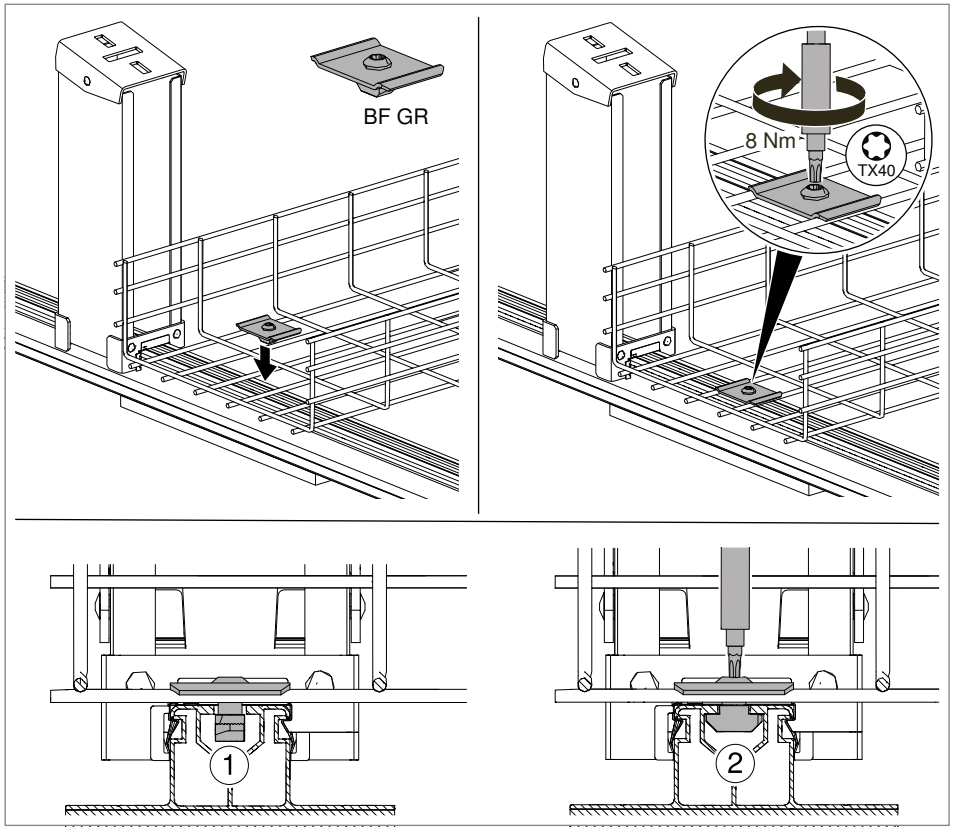

Fig. 16: Fastening mesh cable tray

1. Place the mesh cable tray on the truss profile.

2. Insert the slide nut from the fastening set into the truss profile ①.

3. Tighten the screw from the fastening set with 8 Nm until the slide nut seizes, while clamping the straight wires of the mesh cable tray ②.

4. Fasten the mesh cable tray to all further truss profiles with the fastening set.

Mounting a barrier strip

The barrier strip is fastened to the mesh cable tray with a KS GR fastening set without a screw connection. For type GRM 55 mesh cable trays, the TSG 45 barrier strip is used; barrier strip TSG 85 is used for type GRM 105. Multiple barrier strips are connected lengthwise with the TSG V barrier strip connector.

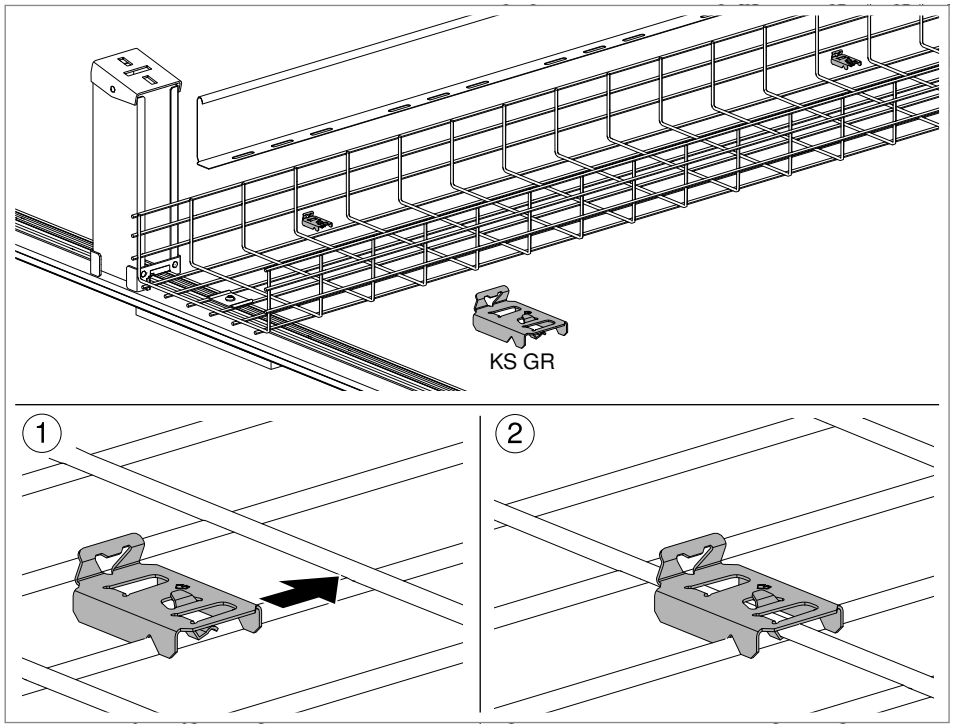

Fig. 17: Fastening barrier strip with fastening set

1. Place the fastening set on the mesh cable tray wire ①.
2. Engage the hook of the fastening set under the mesh cable tray wire ②.

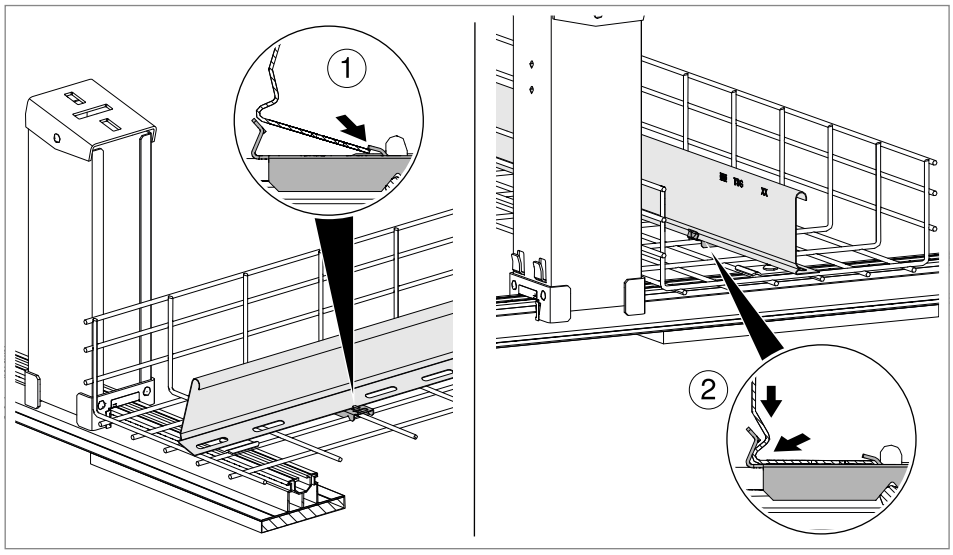

Fig. 18: Clamping the barrier strip

3. Clamp the barrier strip in the fastening set.

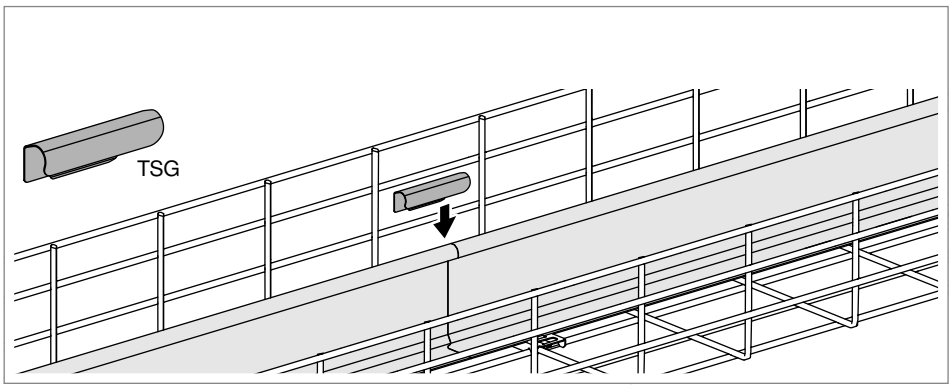

Fig. 19: Clamping barrier strip connector

4. To connect the barrier strips lengthwise, clamp the TSG barrier strip connector at the joint of 2 barrier strips.

Mesh cable tray ballasting

The mesh cable trays are ballasted using standard blocks with a maximum width of 10 cm. The maximum number of blocks per tray depends on the tray width and height and the weight needed to ballast the system. Refer to the system planning for the number of blocks.

Note! *Generally, the blocks can be positioned on the left or right side of the barrier strip. The side is selected at the planner and installer's discretion, e.g. taking into account the accessibility of the cable duct for subsequent cable routing.*

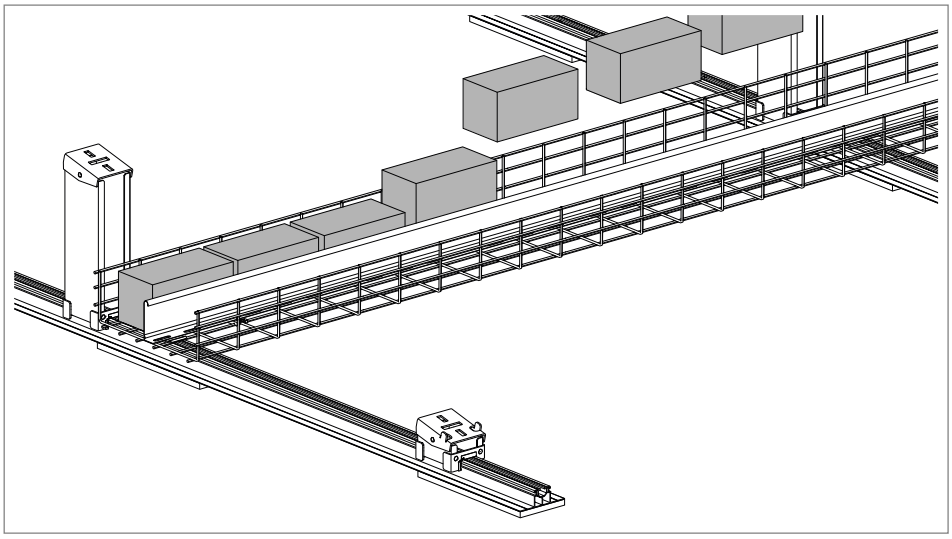

Fig. 20: Mesh cable tray ballasting

1. Place the required number of blocks into the mesh cable tray on one side of the barrier strip.

6.5.2 System ballasting with ballast support plates

Two or three ballast support plates and up to 9 standard blocks with a width of 10 cm can be used.

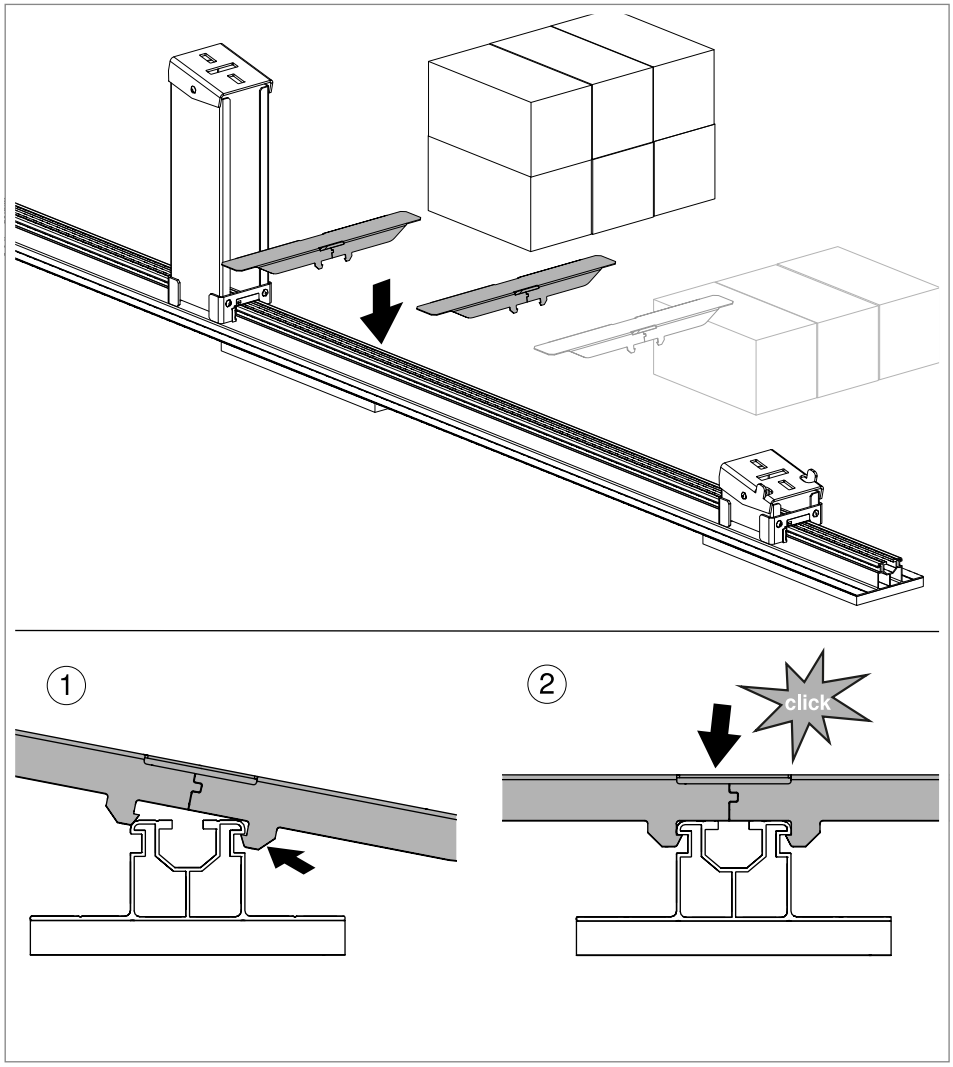

Fig. 21: Engaging ballast support plate

1. Hook the ballast support plate under the truss profile on one side.
2. Press down the ballast support plate and hook under the truss profile on the other side.

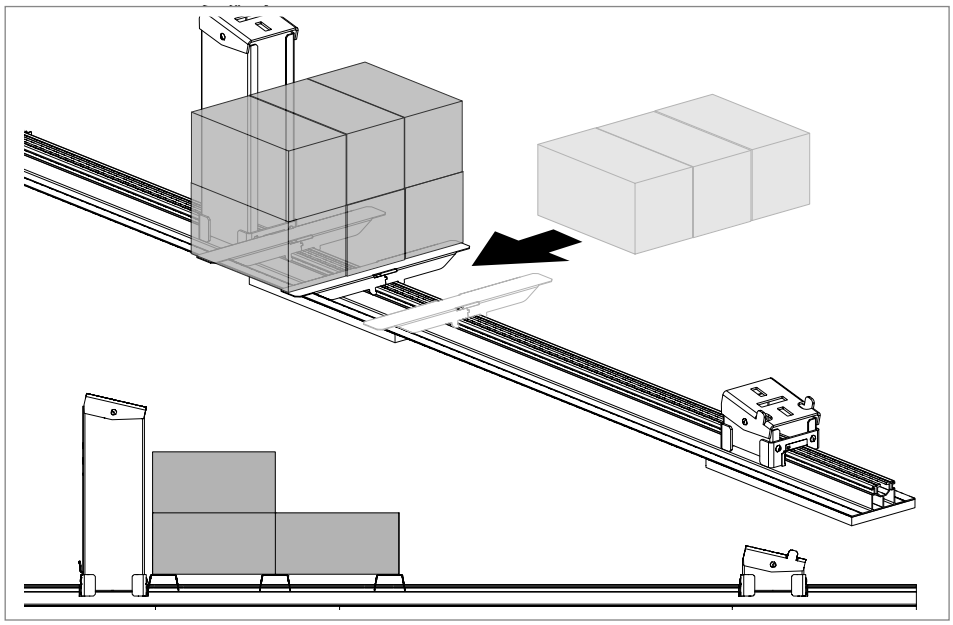

Fig. 22: Ballasting ballast support plates

3. Place the required number of blocks on the ballast support plates.

6.5.3 System ballasting with ballast rails

For ballasting with ballast rails, two ballast rails are mounted parallel to one another on two truss profiles. The rails are ballasted using standard blocks with a maximum width of 10 cm. The maximum number of blocks depends on the rail length and the weight needed to ballast the system.

Note! *When using quarter-point mounting, the ballast rails are laid across 3 truss profiles, as the support rails are closer together. The ballast rails are extended accordingly and only fastened to the outer profiles.*

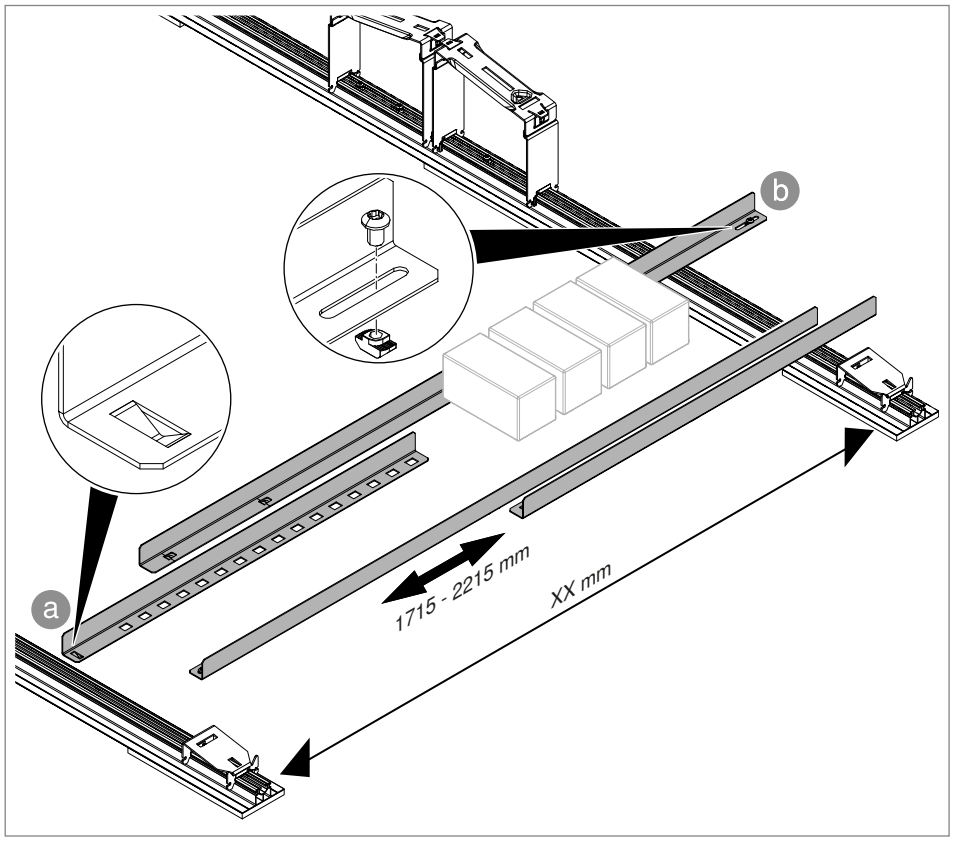

Fig. 23: Using ballast rails

A ballast rail consists of two parts that can be hooked together in increments to set a total length of 1,715 to 2,215 mm. One rail end a is hooked into the truss profile, the other end is fastened to the truss profile opposite via a slot using a slide nut and screw b. Tolerances of up to 50 mm in length can be compensated for via the slot.

Note! *The ballast rails can be positioned between the legs of the long supports STLS AD/STLOW AD or in front of the long supports. Refer to the system planning for the exact position.*

1. Measure the required rail length XX mm.

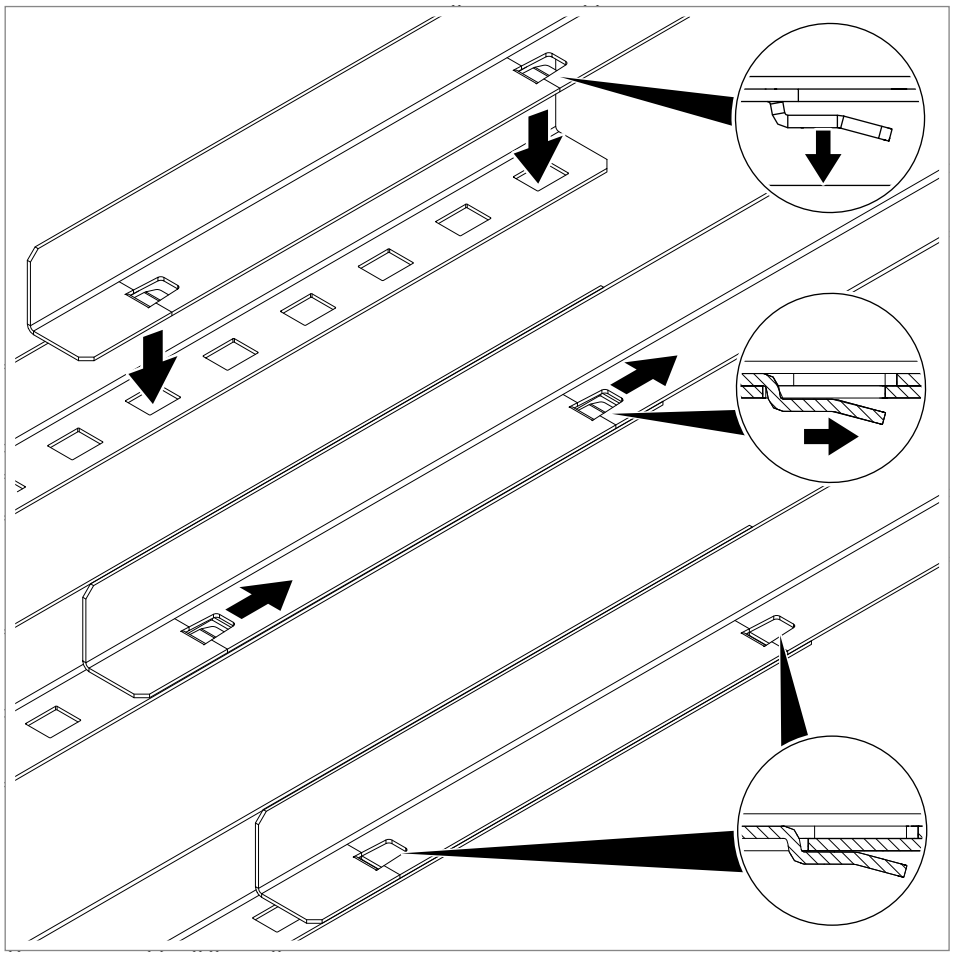

Fig. 24: Hooking together two parts of the ballast rail lengthwise

2. Place the rail parts on top of one another and hook together.

3. Create two ballast rails of equal length.

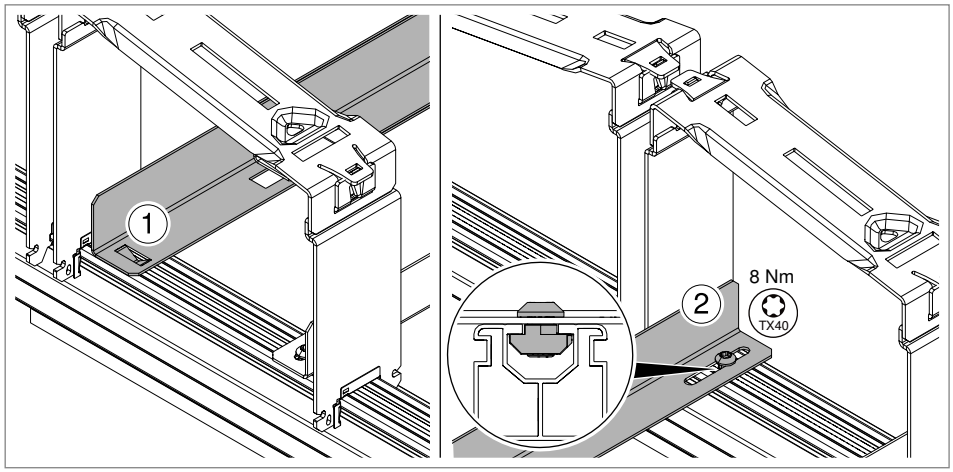

Fig. 25: Fastening the ballast rail

4. Insert the locating end of the ballast rail into the truss profile ①.

5. Fasten the other end of the ballast rail to the second truss profile using a slide nut and screw, and a tightening torque of 8 Nm ②.

6. Mount the second ballast rail parallel to the first ballast rail spaced appropriately (length of block).

Ballasting ballast rails

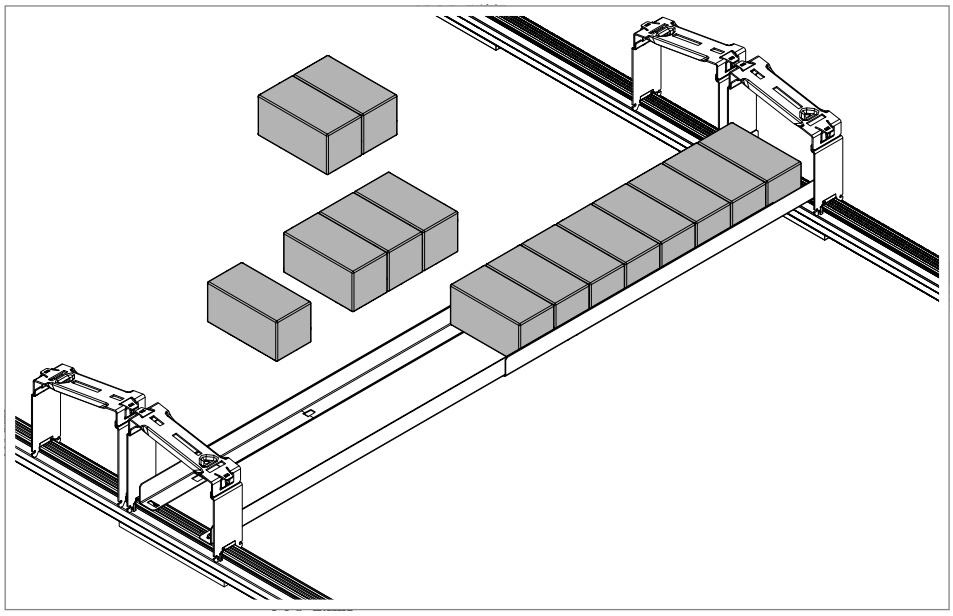

Fig. 26: Ballasting ballast rails

1. Place the required number of blocks onto the ballast rails.

6.6 Positioning PV modules

The PV module is placed on the supports and is then fastened to the supports with universal clamps or end/intermediate clamps with springs. For fastening, horizontal and vertical slots are drilled into the supports for the clamps.

Note! *Depending on the necessary inclination, the support surface of the supports can be adjusted, so that the PV module is flat(see also „6.7 Adjusting the angle of inclination of supports STK/STL“ on page 32).*

Note! *To avoid slippage of the PV modules during mounting, holding straps are worked into the short supports STK and STK AD (see also „Fig. 28: Attaching the PV module with top/bottom fastening“ on page 31).*

Attaching the PV module with side fastening

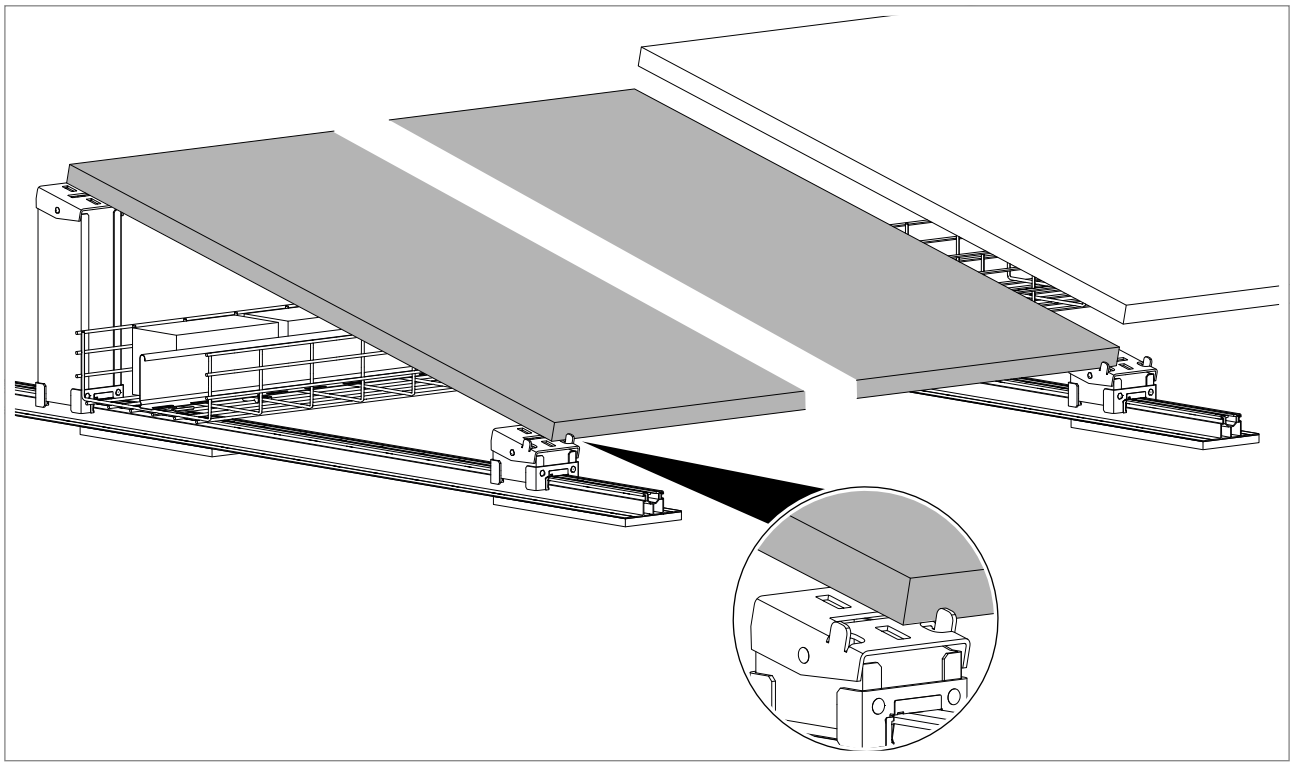

Fig. 27: Attaching the PV module with side fastening

1. In case of side fastening, place the PV module so that a clamp can still be placed in the corresponding slot of the support.

Attaching the PV module with top/bottom fastening

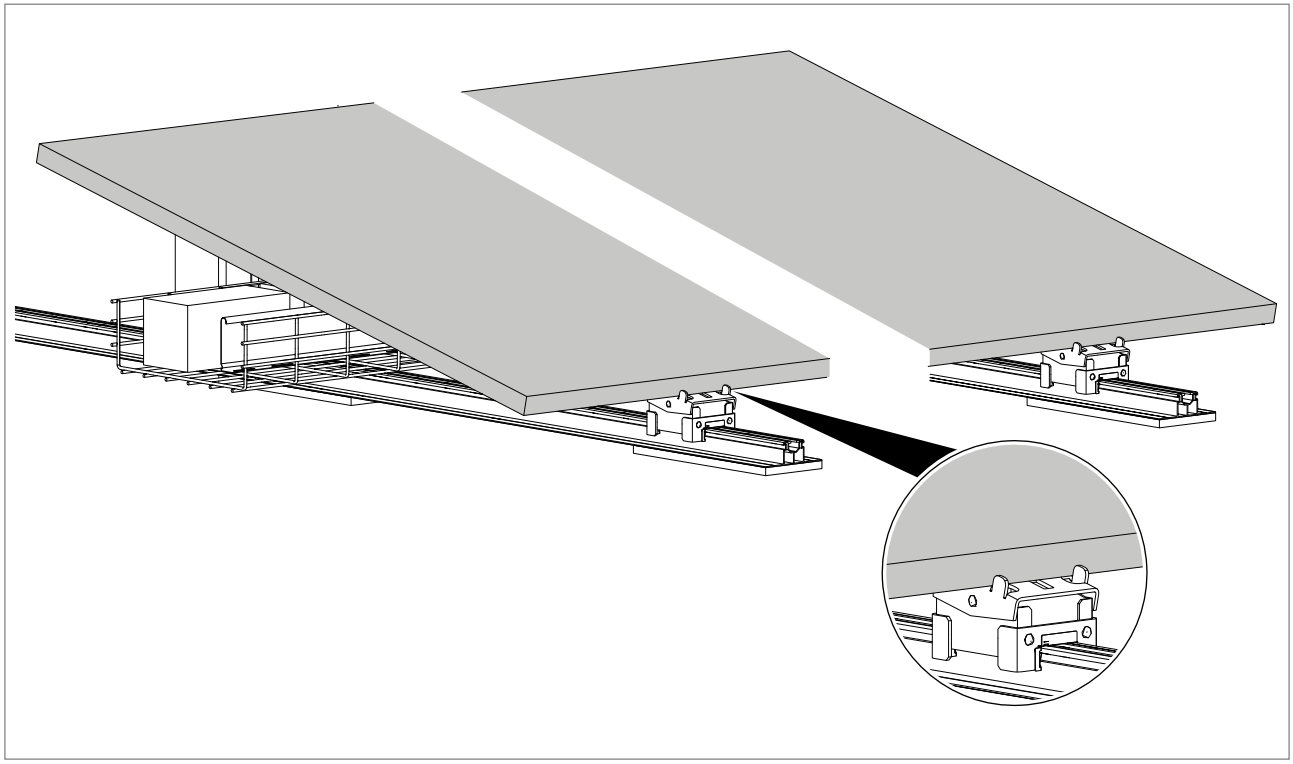

Fig. 28: Attaching the PV module with top/bottom fastening

1. In case of top/bottom fastening, place the PV module so that a clamp can still be placed in the vertical slot of the support.

6.7 Adjusting the angle of inclination of supports STK/STL

For supports STK and STL, the angle of inclination can be adjusted from 13.5° to 15.6°, so that the PV module is flat.

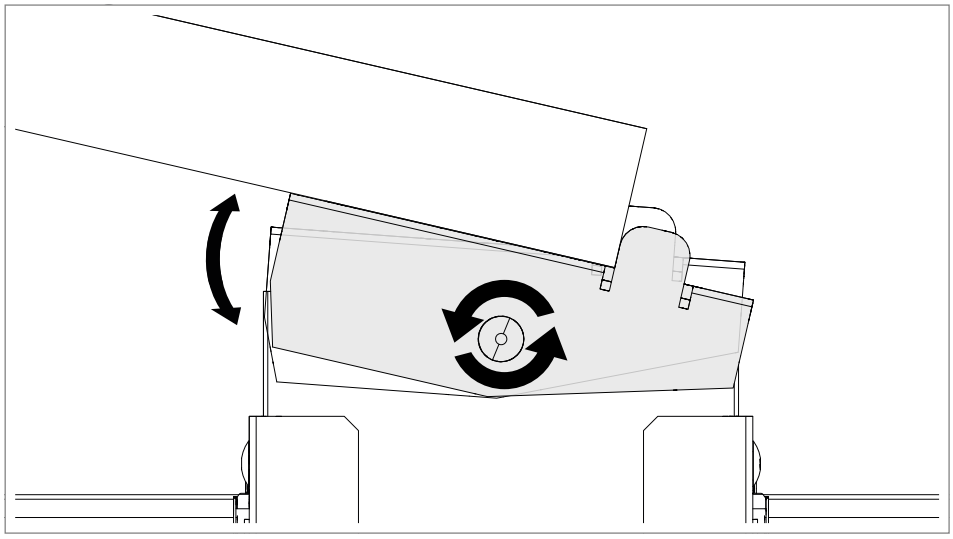

Fig. 29: Adjusting the angle of inclination

1. If necessary, adjust the angle of inclination of the support surfaces by tilting them slightly.

CAUTION

Danger: loose/unsecured module!
If the module frame is not flat on the upper and lower supports in case of quarter-point mounting, the universal clamps cannot be fastened correctly. The module can come loose if the flexible support surfaces of the supports shift later on. Before tightening the screws on the universal clamps, the angle of the support surfaces must be adjusted to the short and long supports so that the module is flat at the at the top and bottom.

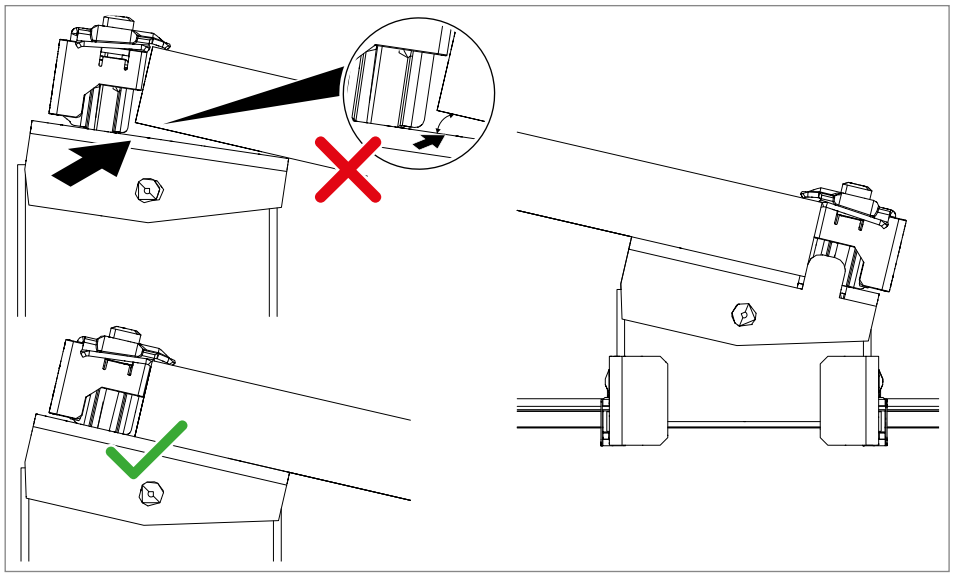

Fig. 30: Angle of inclination incorrect/correct, quarter-point mounting

6.8 Fastening PV modules with universal clamps, angle of inclination 13.5°–15.6°, supports STK/STL

The PV modules are clamped at the edges of the module with at least four universal clamps. With larger modules, six clamping points may be required, depending on the specifications of the module manufacturer.

The universal clamp can be used for the following:

– As an end clamp at the side edges of the module

– As a middle clamp for two modules placed next to each other on the same support

– As an end clamp at the bottom and top edges of the module, if four supports are required per module (quarter-point fastening).

CAUTION

Risk of loss of function of universal clamp!
Pressing on the top part of the universal clamp when inserting and fastening the clamp may impair its function as an end clamp. Do not press on the top part of the clamp, and only fasten the top part of the universal clamp by screwing it onto the module after the PV module has been positioned.

Note! *To make it easy to slide the modules under the universal clamps, the top section of the clamps can be locked in place. To do this, pull the top section upwards until it clicks into place. To secure the modules, do not press the top section of the clamps down by hand; instead, screw on only.*

6.8.1 Fastening the PV module with end clamps at the sides

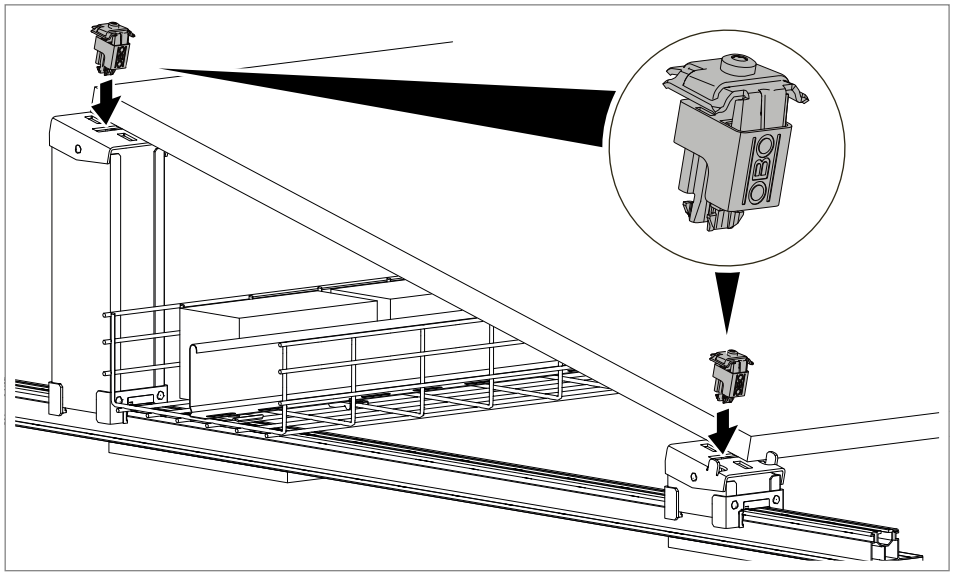

Fig. 31: Inserting the universal clamp in slots

1. Insert universal clamps in the horizontal slots of the short and long support. The “OBO” label points to the bottom edge of the module.

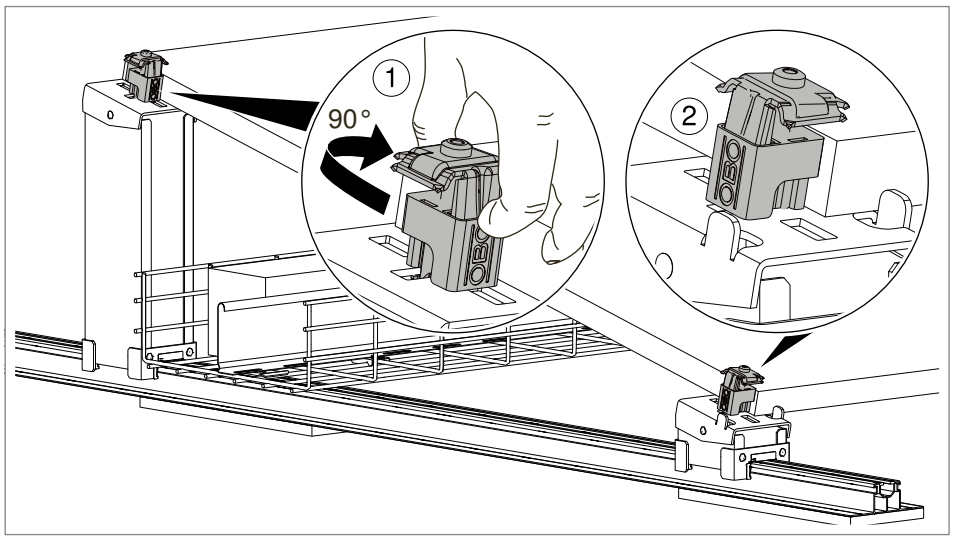

Fig. 32: Manually turn universal clamps

2. Turn the universal clamps through 90° in slots ①. The “OBO” label points outward ②.

3. Push the module up to the universal clamps.

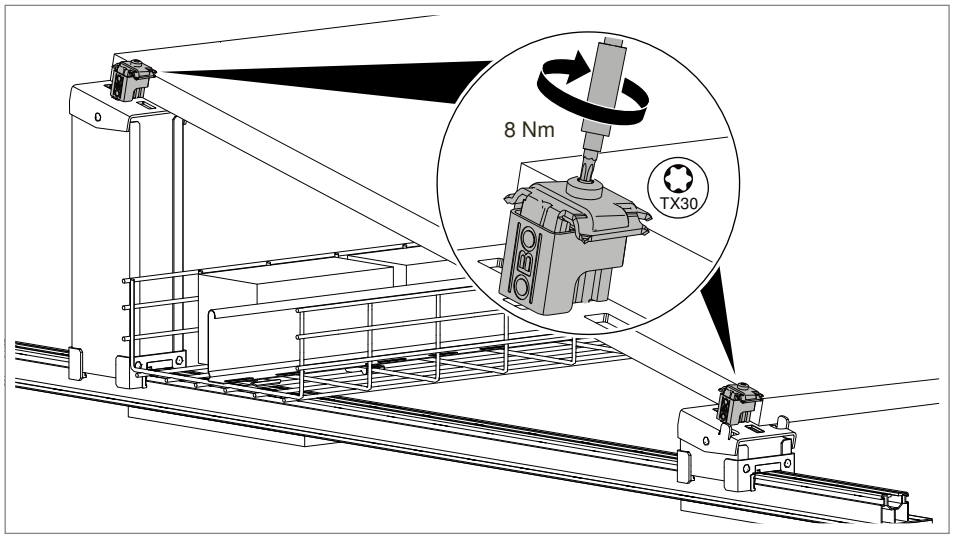

Fig. 33: Fastening universal clamps

4. Tighten the screws of the universal clamps with 8 Nm, in order to fasten the PV module to the supports (observe the max. tightening torque of the module manufacturer).

5. Add additional PV modules and fasten as middle clamps using universal clamps (see „6.8.2 Fastening PV module with middle clamps“ on page 35) or fasten the module with universal clamps as end clamps at the end of the module row.

6.8.2 Fastening PV module with middle clamps

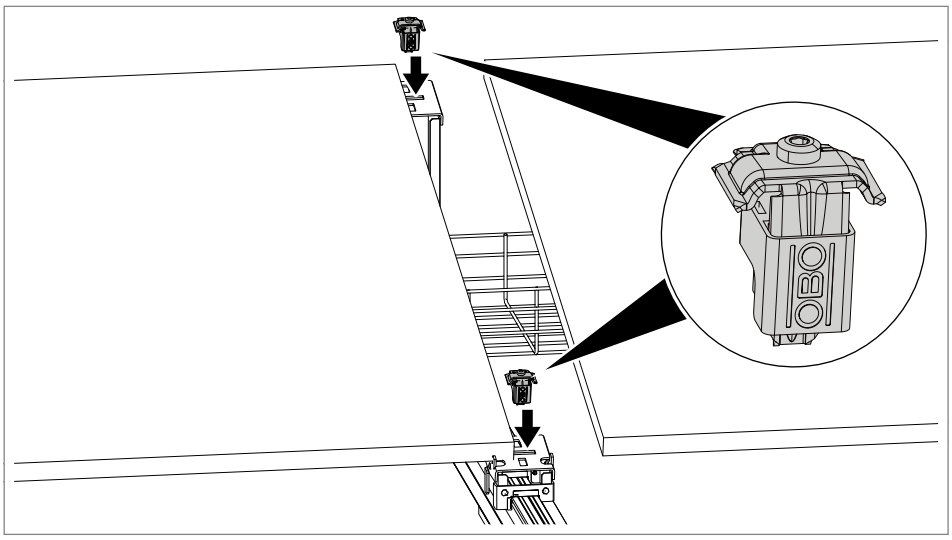

Fig. 34: Inserting the universal clamp in slots

1. Insert universal clamps as middle clamps in the horizontal slots of the middle supports. The “OBO” label points to the top or bottom edge of the module.

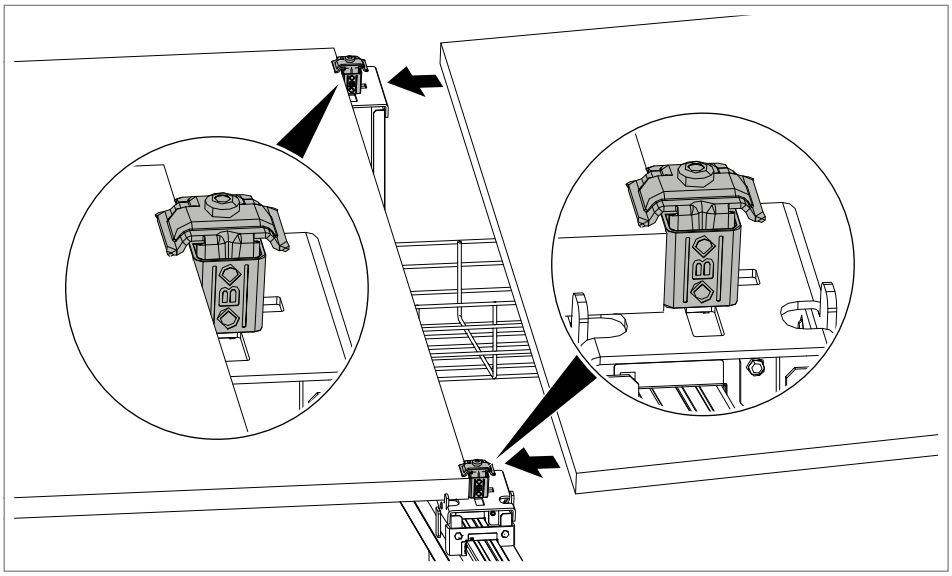

Fig. 35: Inserting universal clamps in horizontal slots

2. Place and align a further PV module and push it up to the universal clamps.

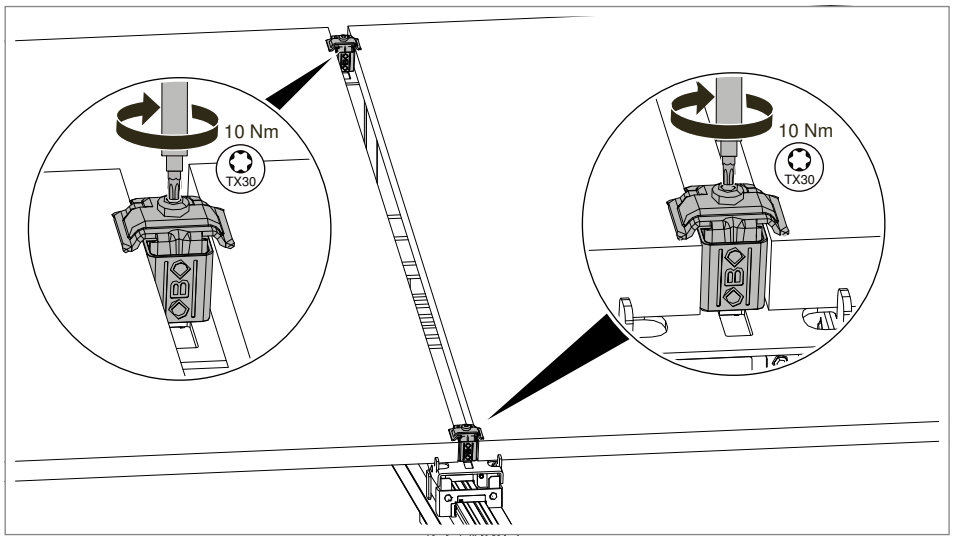

Fig. 36: Fastening PV modules with universal clamps in the middle

3. Tighten the screws of the universal clamps with 10 Nm, in order to fasten the two adjacent PV modules to the supports (observe the max. tightening torque of the module manufacturer).

4. Add additional PV modules and fasten using universal clamps as middle clamps or fasten the module with universal clamps as end clamps at the end of the module row.

6.8.3 Fastening PV module at the top and bottom

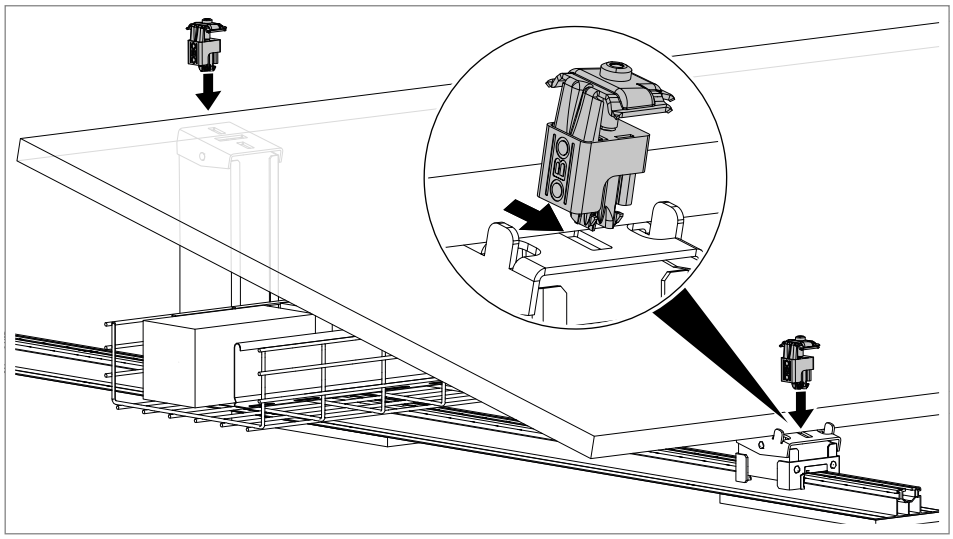

Fig. 37: Inserting universal clamps in vertical slots

1. Insert universal clamps in the vertical slots of the short and long support. The “OBO” label points to the side.

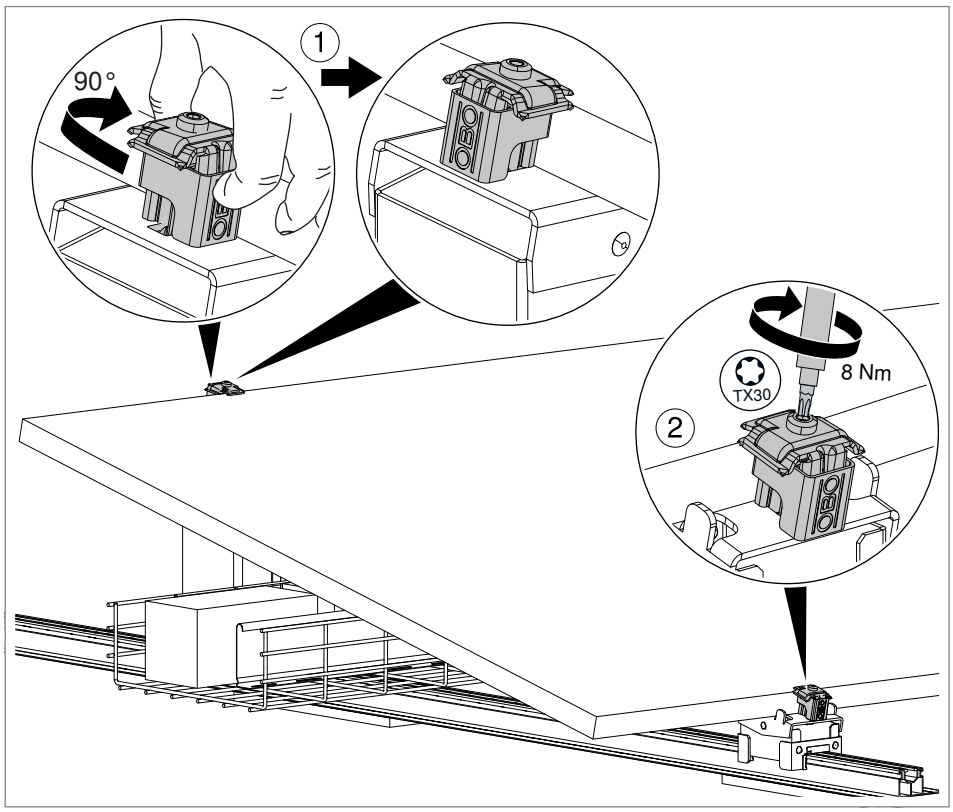

Fig. 38: Fastening universal clamps

2. Turn the universal clamps through 90° in the slots ①.

3. Tighten the screws of the universal clamps with 8 Nm ②, in order to fasten the PV module to the supports (observe the max. tightening torque of the module manufacturer).

4. Place additional PV modules and fasten with universal clamps.

6.9 Fastening the PV module with end/intermediate clamps with springs, angle of inclination 13.5°–15.6°, supports STK/STL

The end clamps and intermediate clamps with springs offer a higher pressure surface and are used for higher snow and wind loads. The finished teeth on the connection plate press into the aluminium frame of the PV module, offering additional support and ensure continuous equipotential bonding.

The end/intermediate clamps can be used for the following:

– As an end clamp at the side edges of the module

– As a intermediate clamp for two modules placed next to each other on the same support

– As an end clamp at the bottom and top edges of the module, if four supports are required per module (quarter-point fastening).

6.9.1 Fastening the PV module with end clamps with springs at the sides

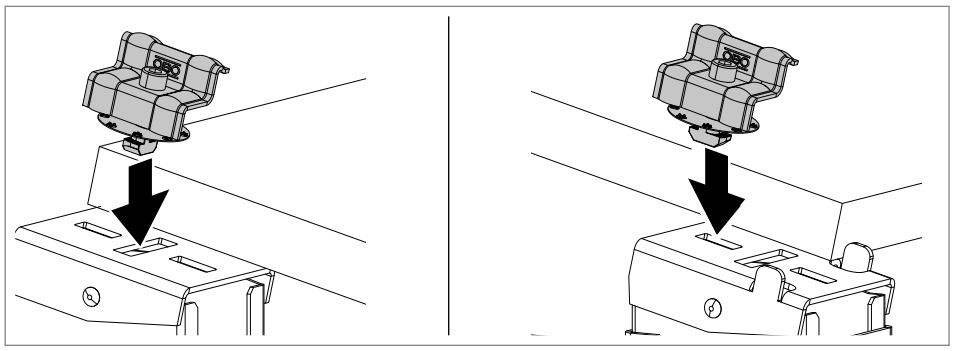

Fig. 39: Inserting end clamps in slots

1. Insert slide nuts of the end clamps in slots (long support = horizontal slot, short support = top vertical slot).

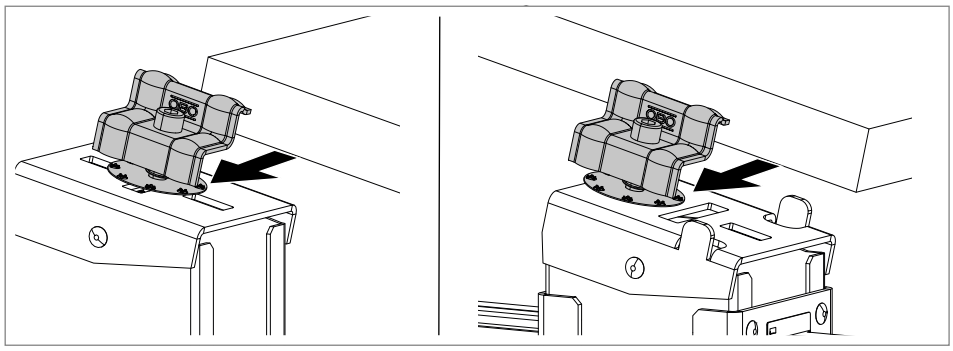

Fig. 40: Pushing module up to the end clamps

2. Push the PV module up to the end clamps at the top and bottom.

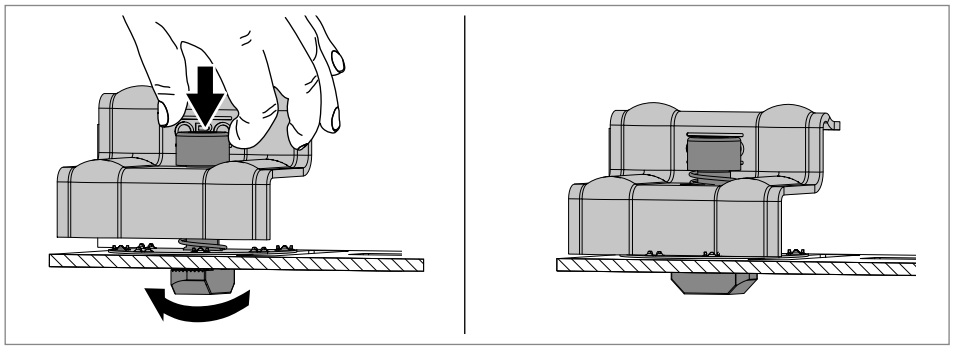

Fig. 41: Engaging the slide nut

3. Press down lightly on the screw with spring and turn until the slide nut engages.

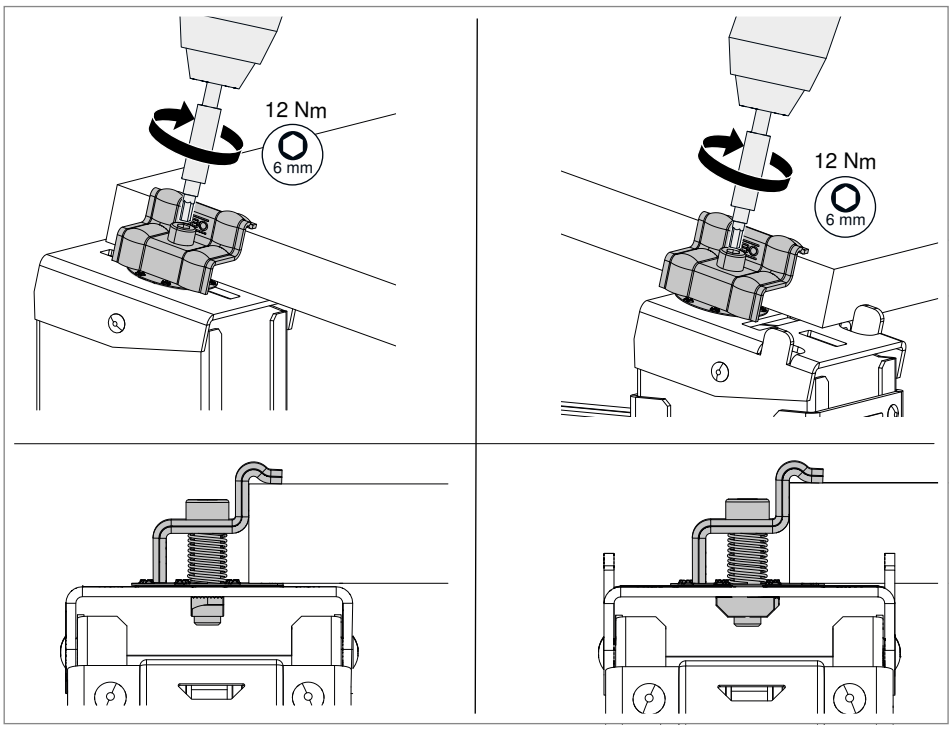

Fig. 42: Tightening the end clamp screws

4. Tighten the screws with 12 Nm.

6.9.2 Fastening PV modules with intermediate clamps with springs

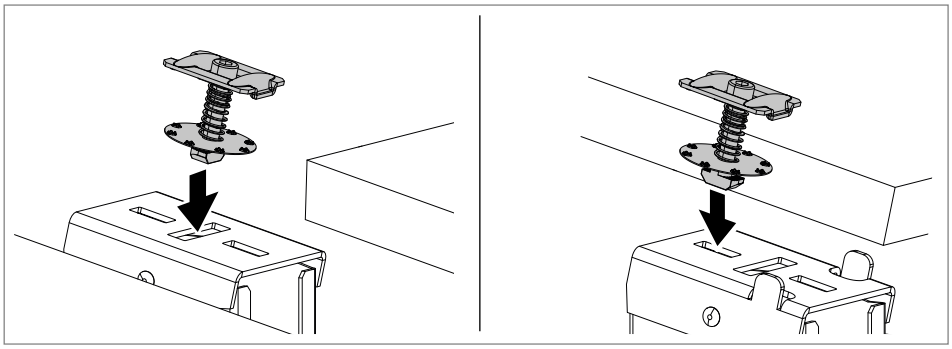

Fig. 43: Inserting intermediate clamps in slots

1. Insert slide nuts of the intermediate clamps in slots (long support = horizontal slot, short support = top vertical slot).

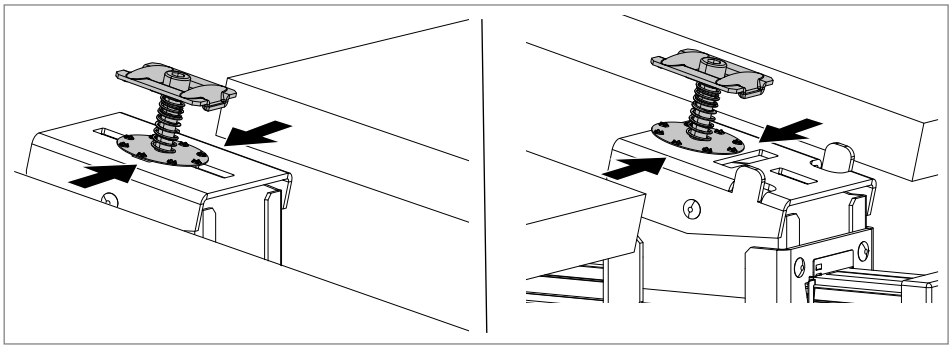

Fig. 44: Pushing module up to the intermediate clamps

2. Push the PV module up to the intermediate clamps at the top and bottom.

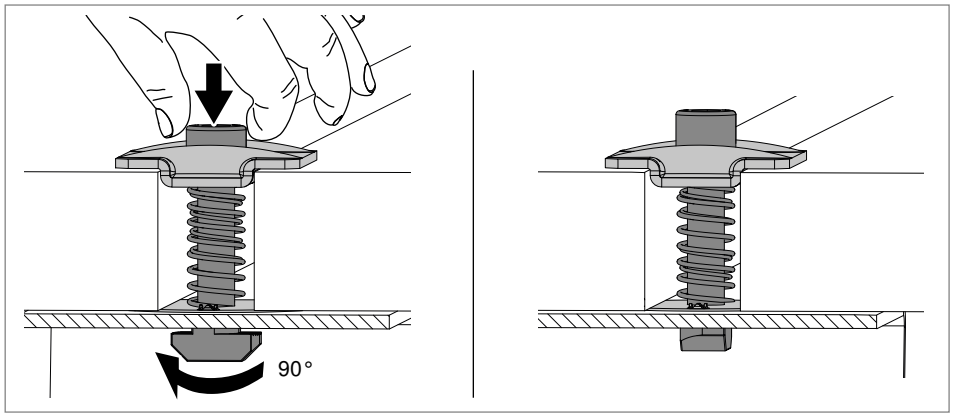

Fig. 45: Engaging the slide nut

3. Press down lightly on the screw with spring and turn until the slide nut engages.

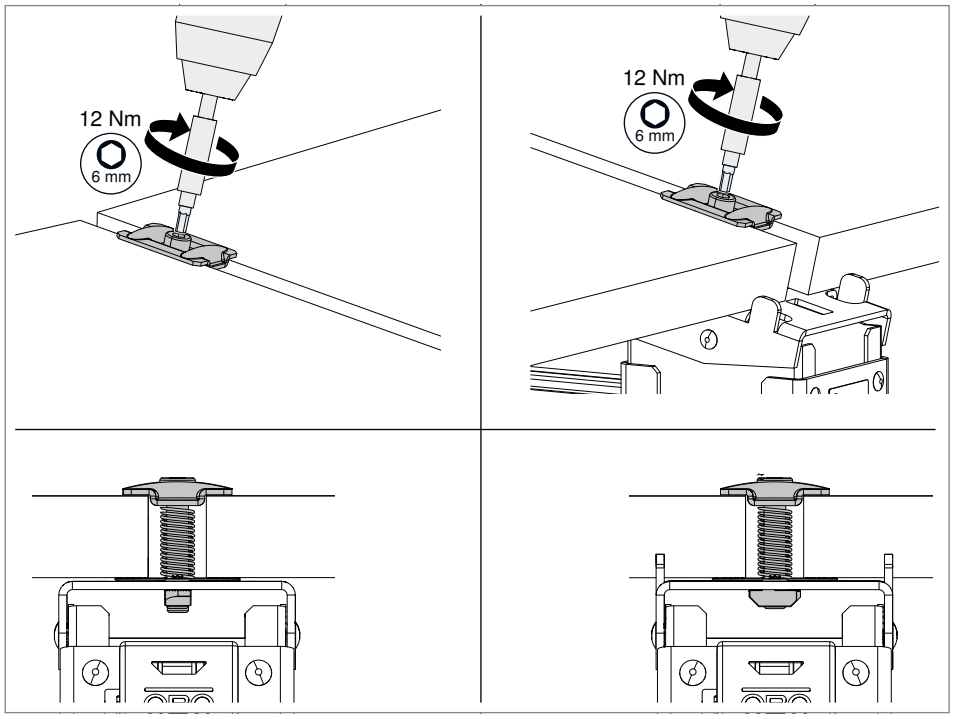

Fig. 46: Tightening the intermediate clamp screws

4. Tighten the screws with 12 Nm.

6.9.3 Fastening the PV module with end clamps with springs at the top

and bottom

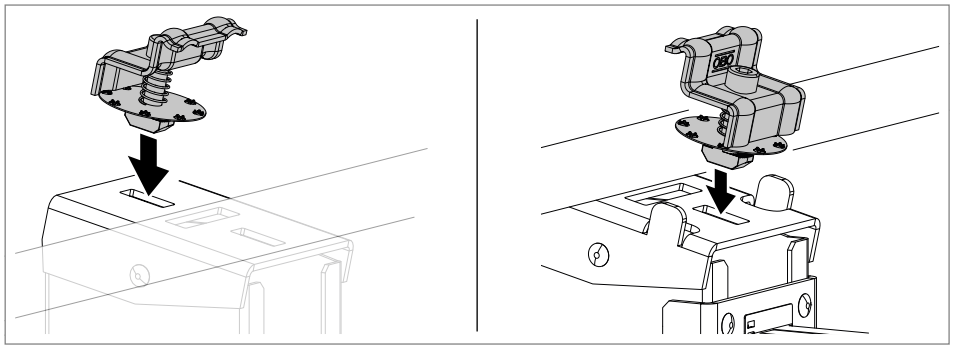

Fig. 47: Inserting end clamps with springs in slots

1. Insert slide nuts of the end clamps in vertical slots (long support = top slot, short support = bottom slot).

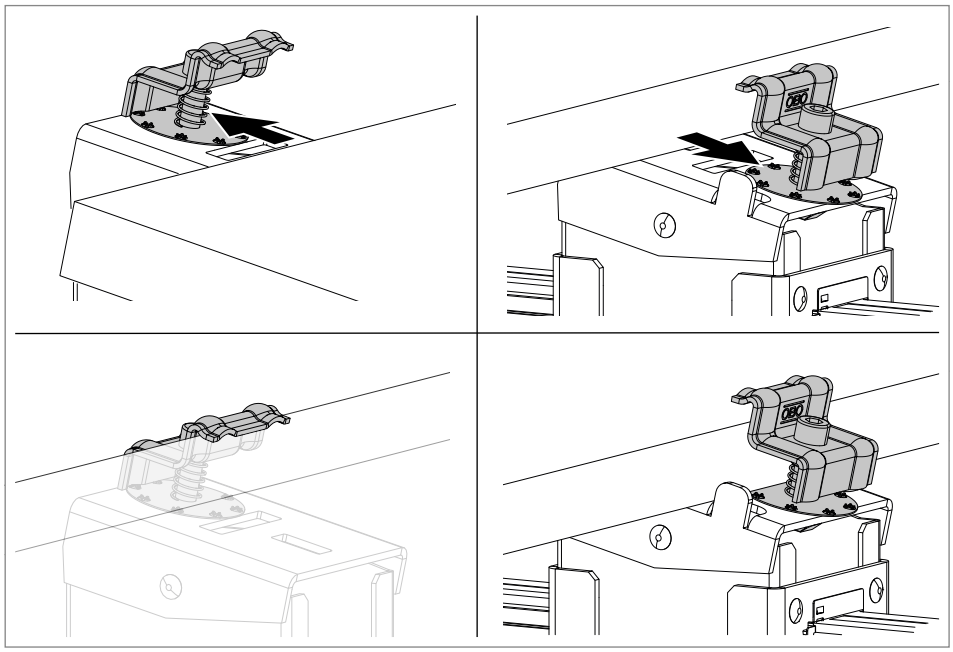

Fig. 48: Pushing module up to the end clamps

2. Push the PV module up to the end clamps at the top and bottom.

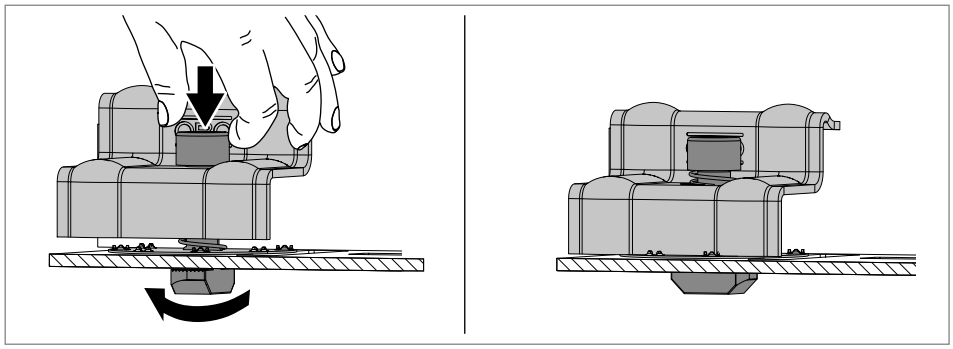

Fig. 49: Engaging the slide nut

3. Press down lightly on the screw with spring and turn until the slide nut engages.

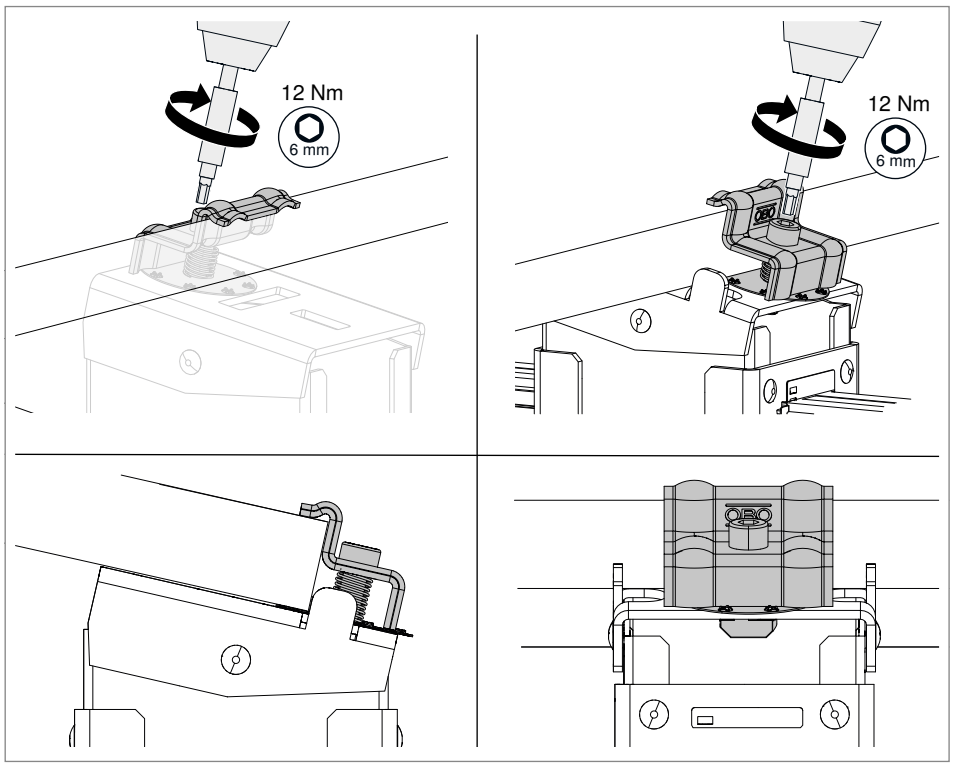

Fig. 50: Tightening the end clamp screws

4. Tighten the screws with 12 Nm.

6.10 Fastening PV modules with universal clamps, angle of inclination 10°, supports STK AD/STLOW AD/STLS AD

Note! *The following only shows mounting of the PV modules on the long supports STLOW AD. Mounting on the long supports STLS AD is done in the same way.*

The PV modules are clamped at the edges of the module with at least four universal clamps. With larger modules, six clamping points may be required, depending on the specifications of the module manufacturer.

The universal clamp can be used for the following:

– As an end clamp at the side edges of the module

– As a middle clamp for two modules placed next to each other on the same support

– As an end clamp at the bottom and top edges of the module, if four supports are required per module (quarter-point fastening).

CAUTION

Risk of loss of function of universal clamp!
Pressing on the top part of the universal clamp when inserting and fastening the clamp may impair its function as an end clamp. Do not press on the top part of the clamp, and only fasten the top part of the universal clamp by screwing it onto the module after the PV module has been positioned.

Note! *To make it easy to slide the modules under the universal clamps, the top section of the clamps can be locked in place. To do this, pull the top section upwards until it clicks into place. To secure the modules, do not press the top section of the clamps down by hand; instead, screw on only.*

6.10.1 Fastening the PV module with end clamps at the sides

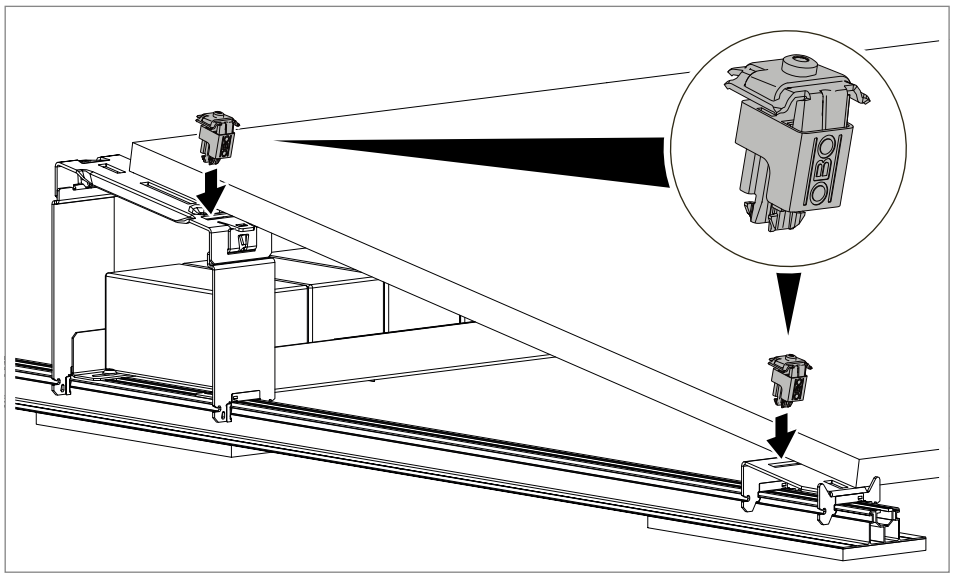

Fig. 51: Inserting universal clamps in slots

1. Insert universal clamps in the horizontal slots of the short and long support. The “OBO” label points to the bottom edge of the module.

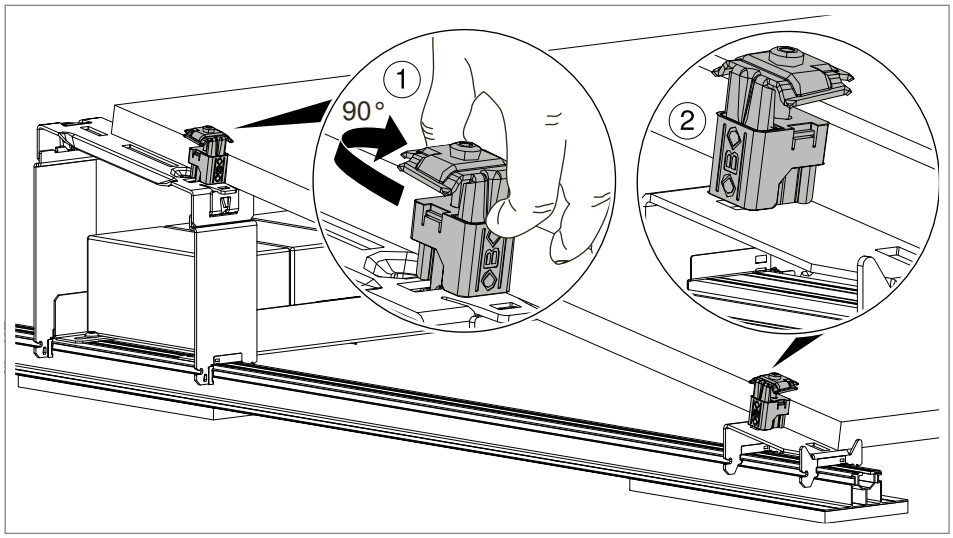

Fig. 52: Manually turn universal clamps

2. Turn the universal clamps through 90° in slots ①. The “OBO” label points outward ②.

3. Push the module up to the universal clamps.

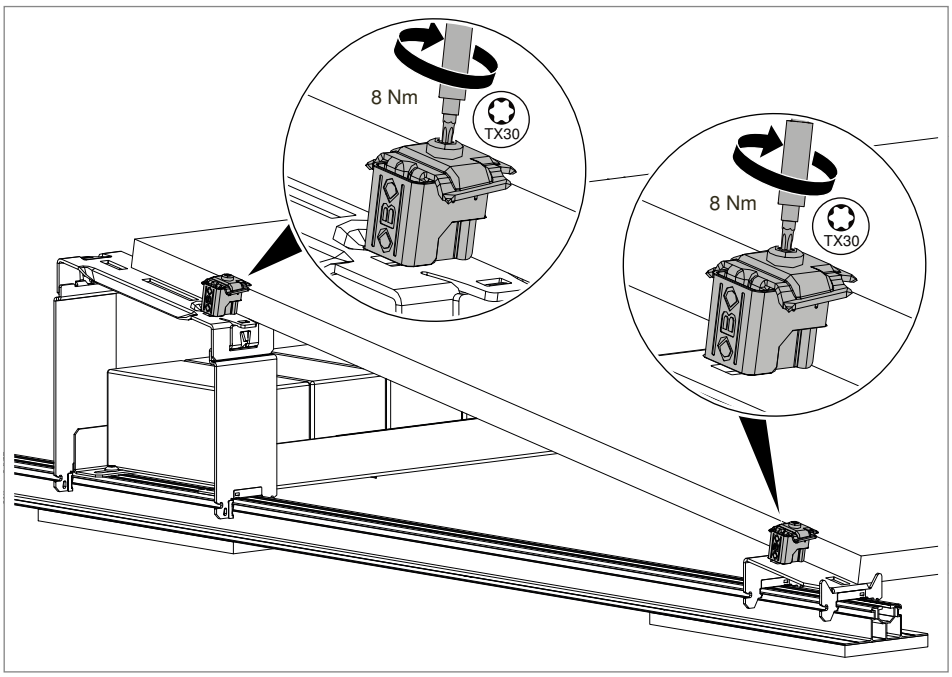

Fig. 53: Fastening universal clamps

4. Tighten the screws of the universal clamps with 8 Nm, in order to fasten the PV module to the supports (observe the max. tightening torque of the module manufacturer).

5. Add additional PV modules and fasten as middle clamps using universal clamps (see „6.8.2 Fastening PV module with middle clamps“ on page 35) or fasten the module with universal clamps as end clamps at the end of the module row.

6.10.2 Fastening PV module with middle clamps

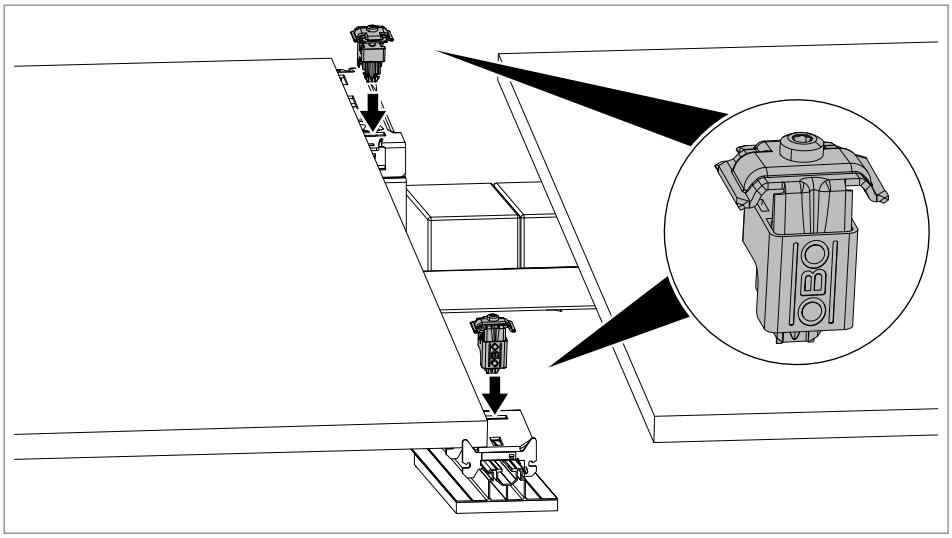

Fig. 54: Inserting the universal clamp in slots

1. Insert universal clamps as middle clamps in the horizontal slots of the middle supports. The “OBO” label points to the top or bottom edge of the module.

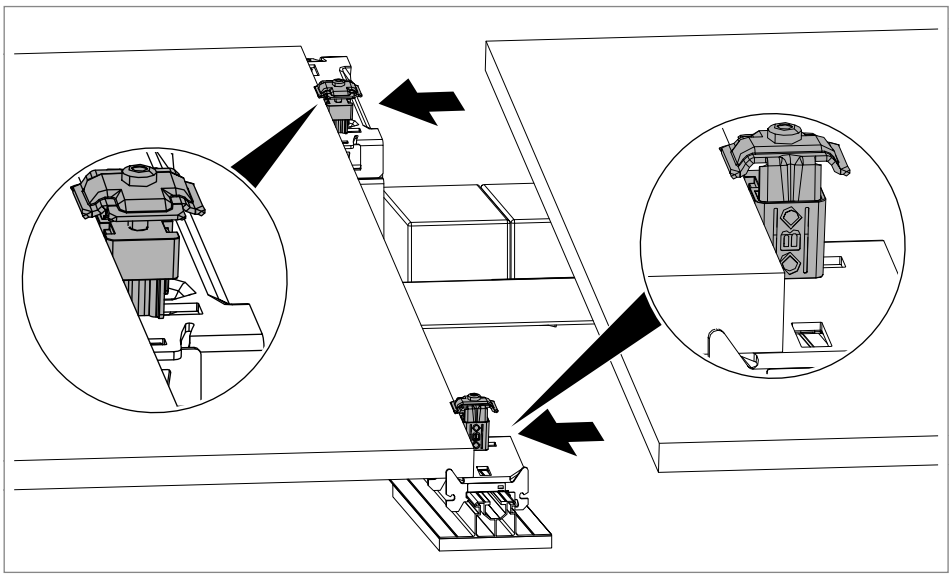

Fig. 55: Inserting universal clamps in horizontal slots

2. Place and align a further PV module and push it up to the universal clamps.

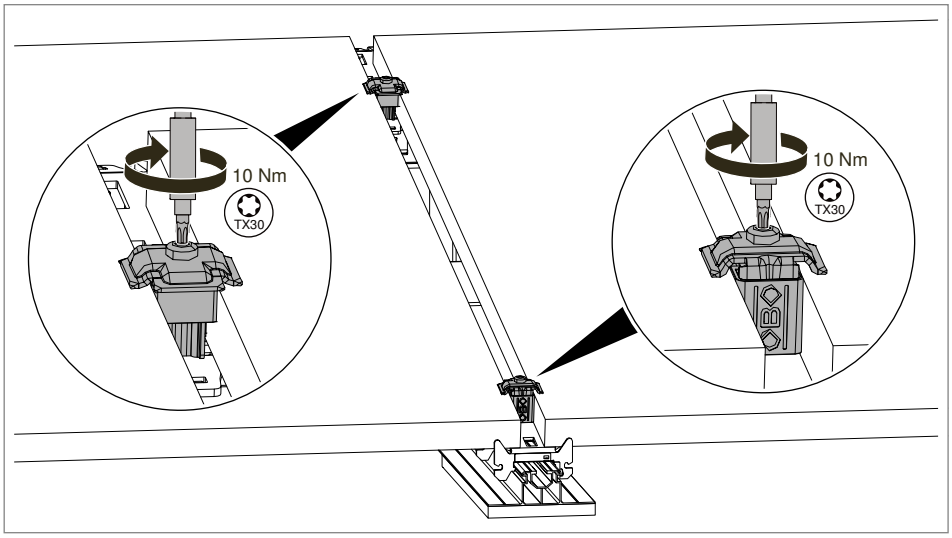

Fig. 56: Fastening PV modules with universal clamps in the middle

3. Tighten the screws of the universal clamps with 10 Nm, in order to fasten the two adjacent PV modules to the supports (observe the max. tightening torque of the module manufacturer).

4. Add additional PV modules and fasten using universal clamps as middle clamps or fasten the module with universal clamps as end clamps at the end of the module row.

6.10.3 Fastening PV module at the top and bottom

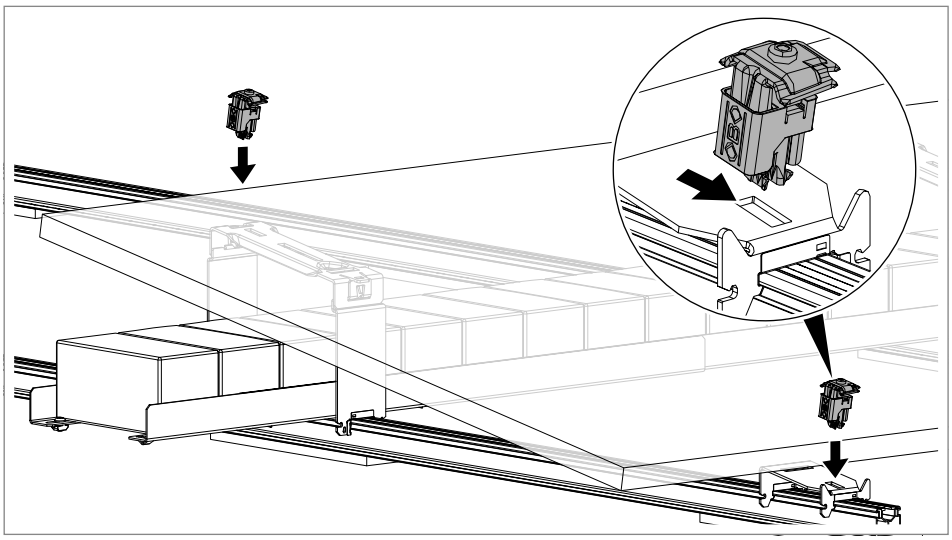

Fig. 57: Inserting universal clamps in vertical slots

1. Insert universal clamps in the vertical slots of the short and long support. The “OBO” label points to the side.

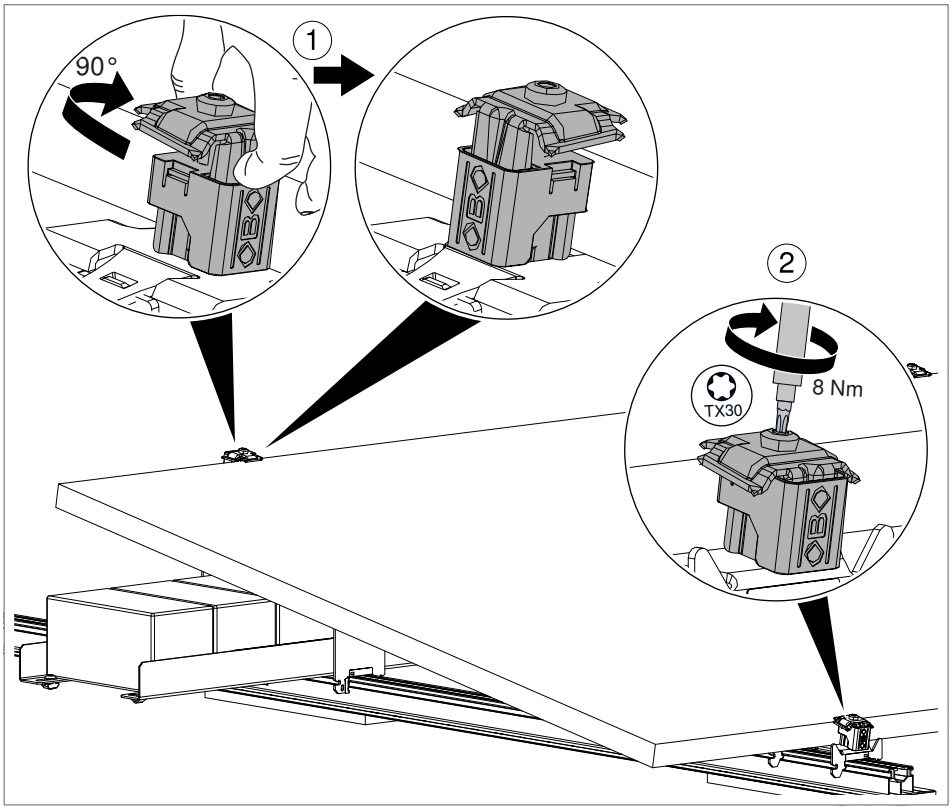

Fig. 58: Fastening universal clamps

2. Turn the universal clamps through 90° in the slots ①.

3. Tighten the screws of the universal clamps with 8 Nm ②, in order to fasten the PV module to the supports (observe the max. tightening torque of the module manufacturer).

4. Place additional PV modules and fasten with universal clamps.

6.11 Fastening the PV module with end/intermediate clamps with springs, angle of inclination 10°, supports STK AD/ STLOW AD/STLS AD

Note! *The following only shows mounting of the PV modules on the long supports STLOW AD. Mounting on the long supports STLS AD is done in the same way.*

The end clamps and intermediate clamps with springs offer a higher pressure surface and are used for higher snow and wind loads. The finished teeth on the connection plate press into the aluminium frame of the PV module, offering additional support and ensure continuous equipotential bonding.

The end/intermediate clamps can be used for the following:

– As an end clamp at the side edges of the module

– As a intermediate clamp for two modules placed next to each other on the same support

– As an end clamp at the bottom and top edges of the module, if four supports are required per module (quarter-point fastening).

6.11.1 Fastening the PV module with end clamps with springs at the sides

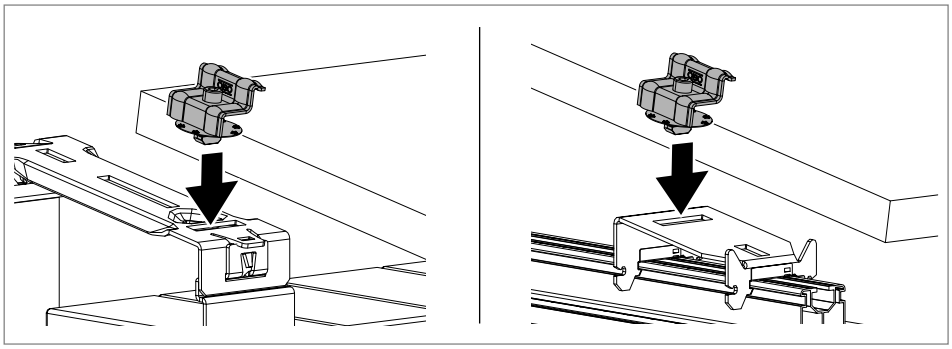

Fig. 59: Inserting end clamps in slots

1. Insert slide nuts of the end clamps in horizontal slots.

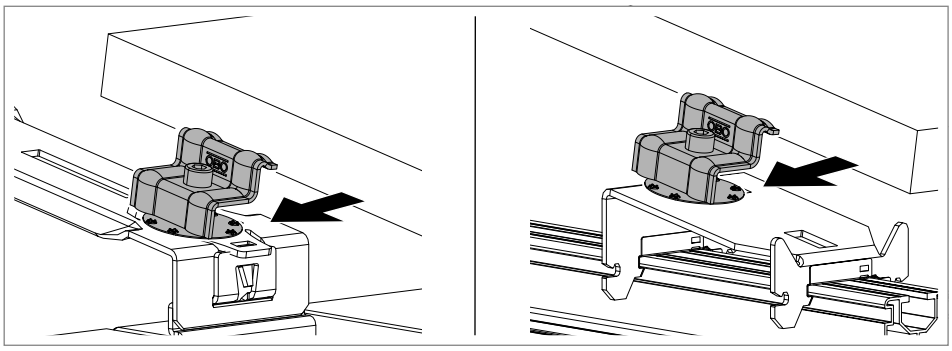

Fig. 60: Pushing module up to the end clamps

2. Push the PV module up to the end clamps at the top and bottom.

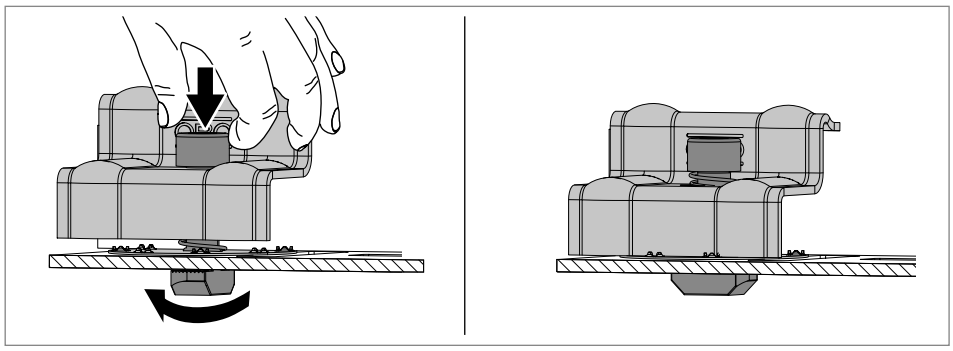

Fig. 61: Engaging the slide nut

3. Press down lightly on the screw with spring and turn until the slide nut engages.

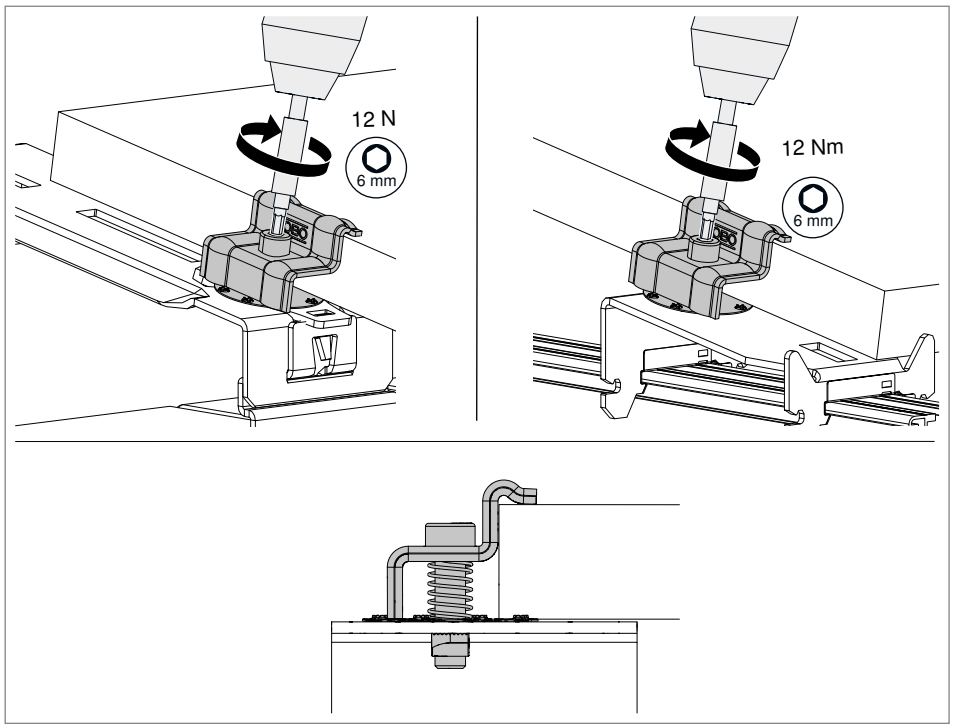

Fig. 62: Tightening the end clamp screws

4. Tighten the screws with 12 Nm.

6.11.2 Fastening PV modules with intermediate clamps with springs

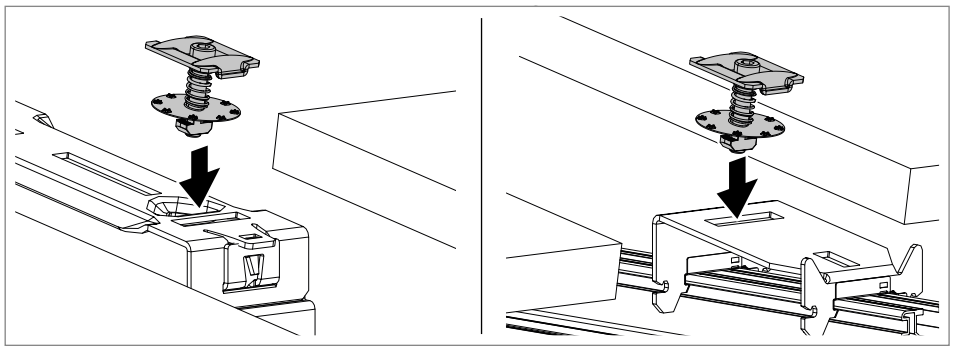

Fig. 63: Inserting intermediate clamps in slots

1. Insert slide nuts of the intermediate clamps in horizontal slots.

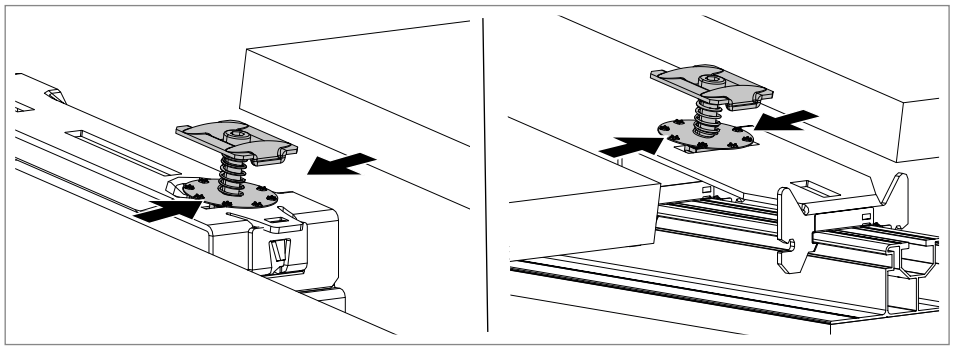

Fig. 64: Pushing module up to the intermediate clamps

2. Push the PV module up to the intermediate clamps at the top and bottom.

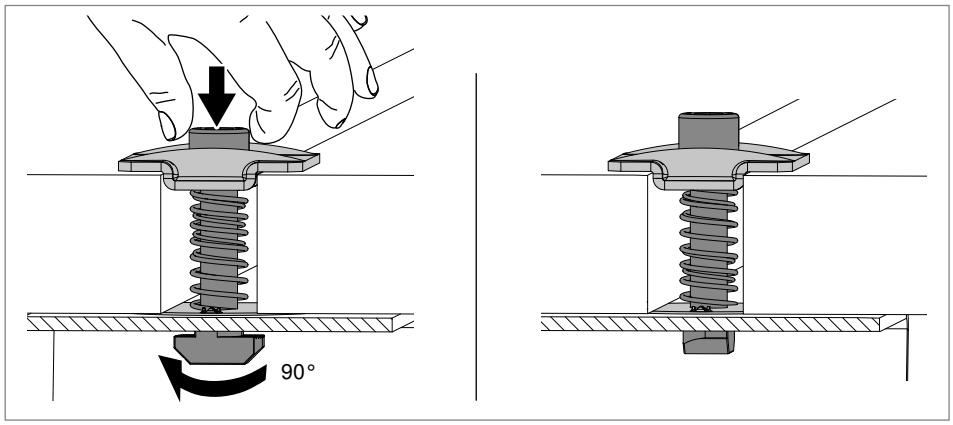

Fig. 65: Engaging the slide nut

3. Press down lightly on the screw with spring and turn until the slide nut engages.

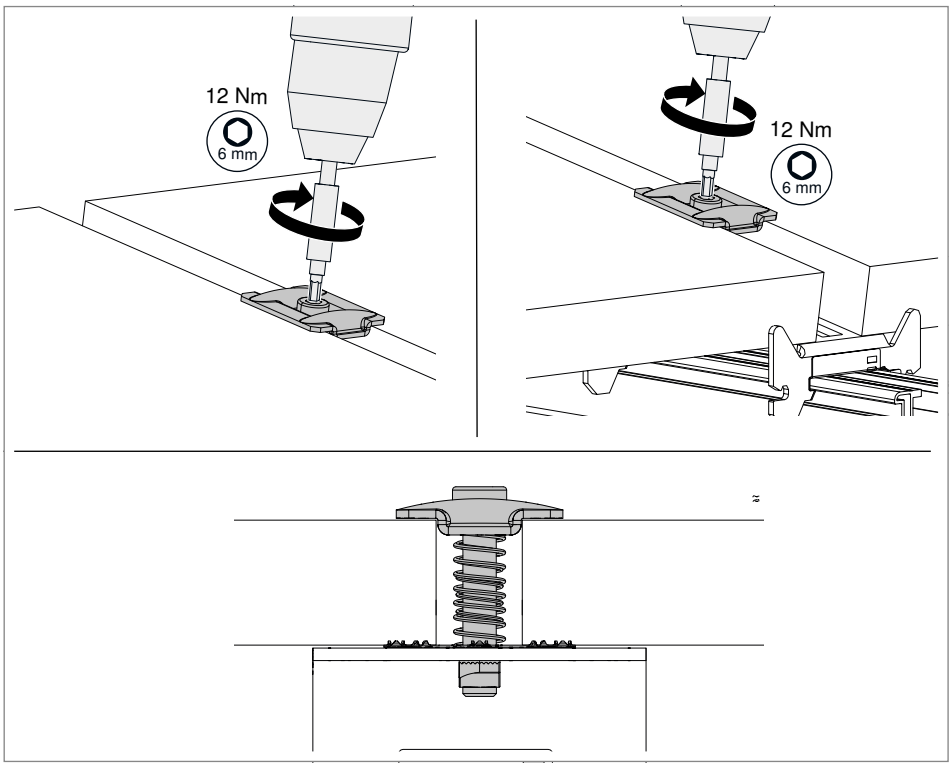

Fig. 66: Tightening the intermediate clamp screws

4. Tighten the screws with 12 Nm.

6.11.3 Fastening the PV module with end clamps with springs at the top and bottom

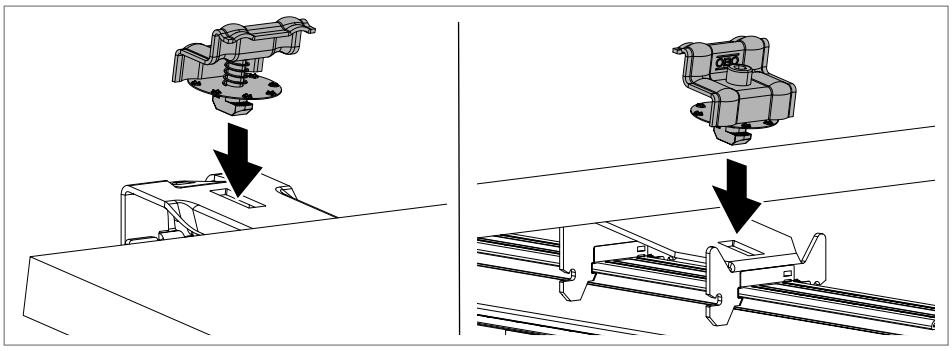

Fig. 67: Inserting end clamps with springs in slots

1. Insert slide nuts of the end clamps in vertical slots (long support = top slot, short support = bottom slot).

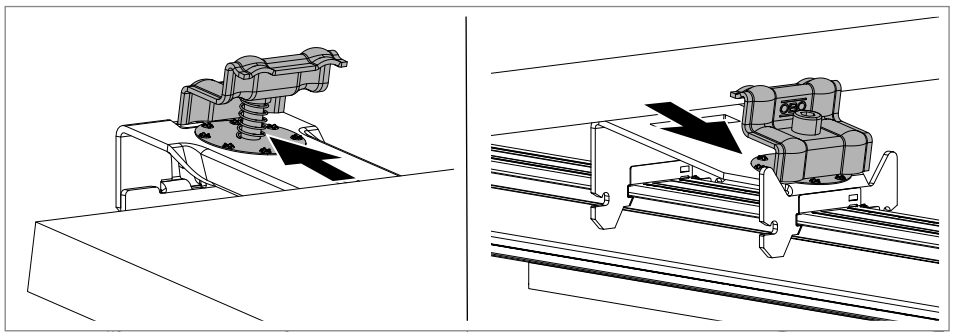

Fig. 68: Pushing module up to the end clamps

2. Push the PV module up to the end clamps at the top and bottom.

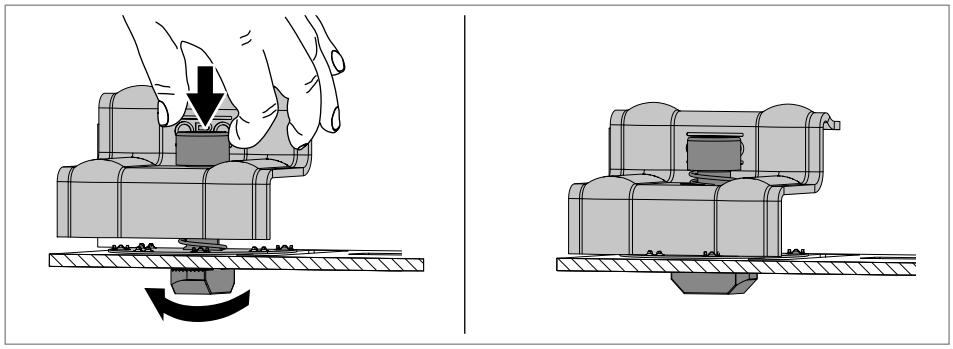

Fig. 69: Engaging the slide nut

3. Press down lightly on the screw with spring and turn until the slide nut engages.

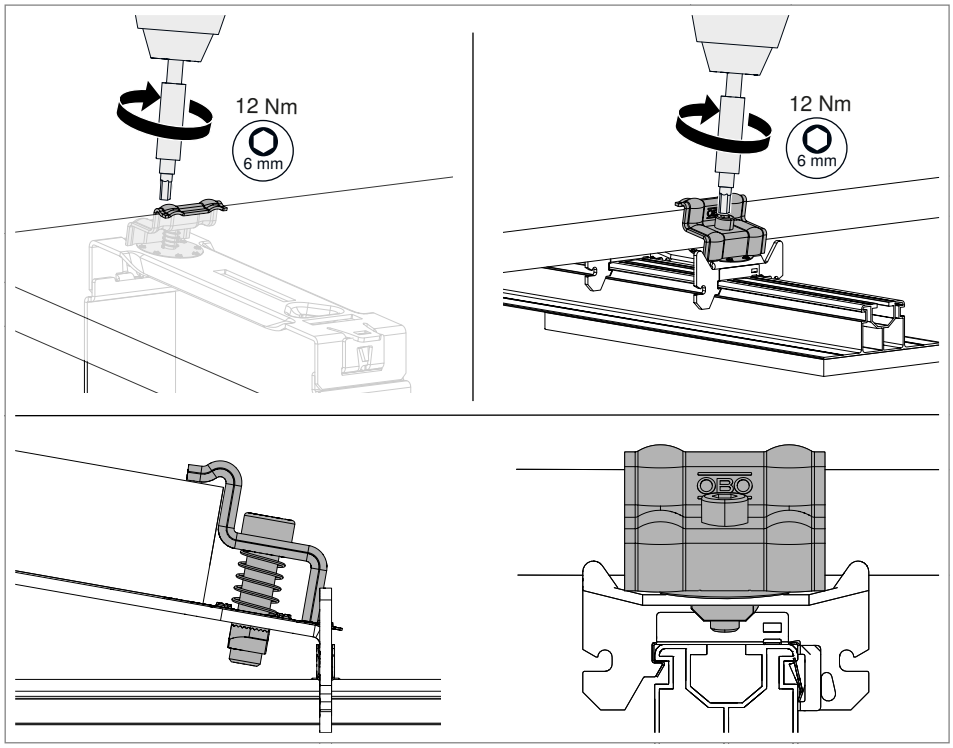

Fig. 70: Tightening the end clamp screws

4. Tighten the screws with 12 Nm.

6.12 Replacing the PV module

The following only shows the replacing of the PV module fastened with universal clamps. If the modules are fastened with end/intermediate clamps with springs, the screws of the clamps are unscrewed in the same way and the PV module removed accordingly.

6.12.1 Replacing with side and middle fastening

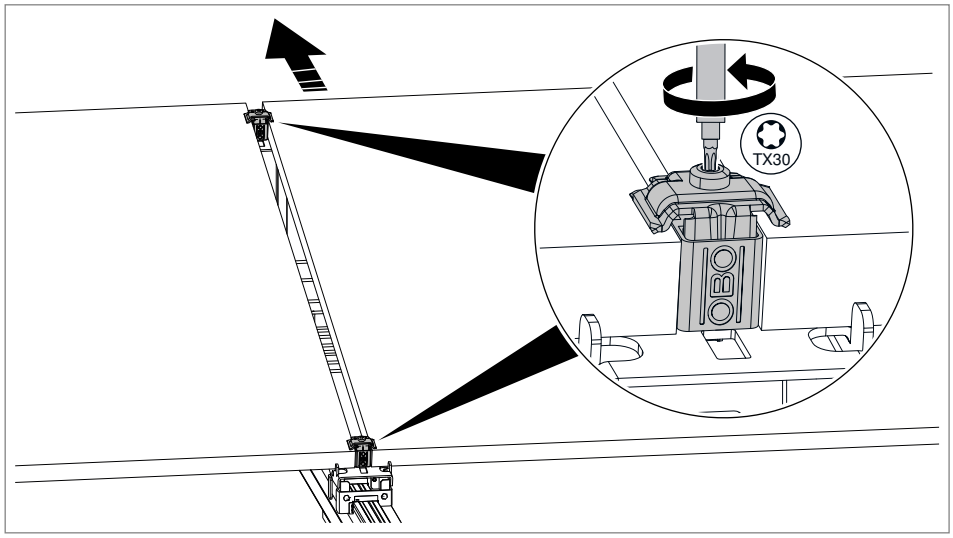

Fig. 71: Replacing the PV module, side and middle fastening

1. Unscrew the screws of the universal middle and end clamps slightly.
2. Push the PV module upwards and out to exchange it.
3. Push in the new PV module from above.
4. Fasten the universal clamps with the prescribed tightening torque.

6.12.2 Replacing with top and bottom fastening

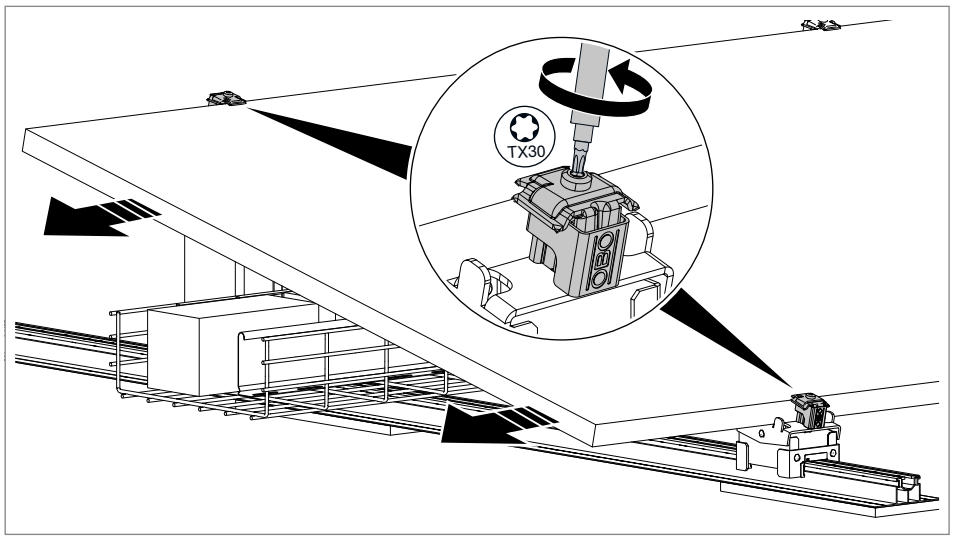

Fig. 72: Replacing the PV module, top and bottom fastening

1. Loosen the screws on the universal clamps slightly.
2. Slide the PV module out at the side to replace it.
3. Push in the new PV module at the side.
4. Fasten the universal clamps with the prescribed tightening torque.

6.13 Mounting the windbreak

To prevent the PV mounting system from becoming unstable or damaged due to the impact of wind from below, windbreaks must be mounted on the long supports of south-facing PV systems.

6.13.1 Mounting windbreak WSB 2200 to supports STL

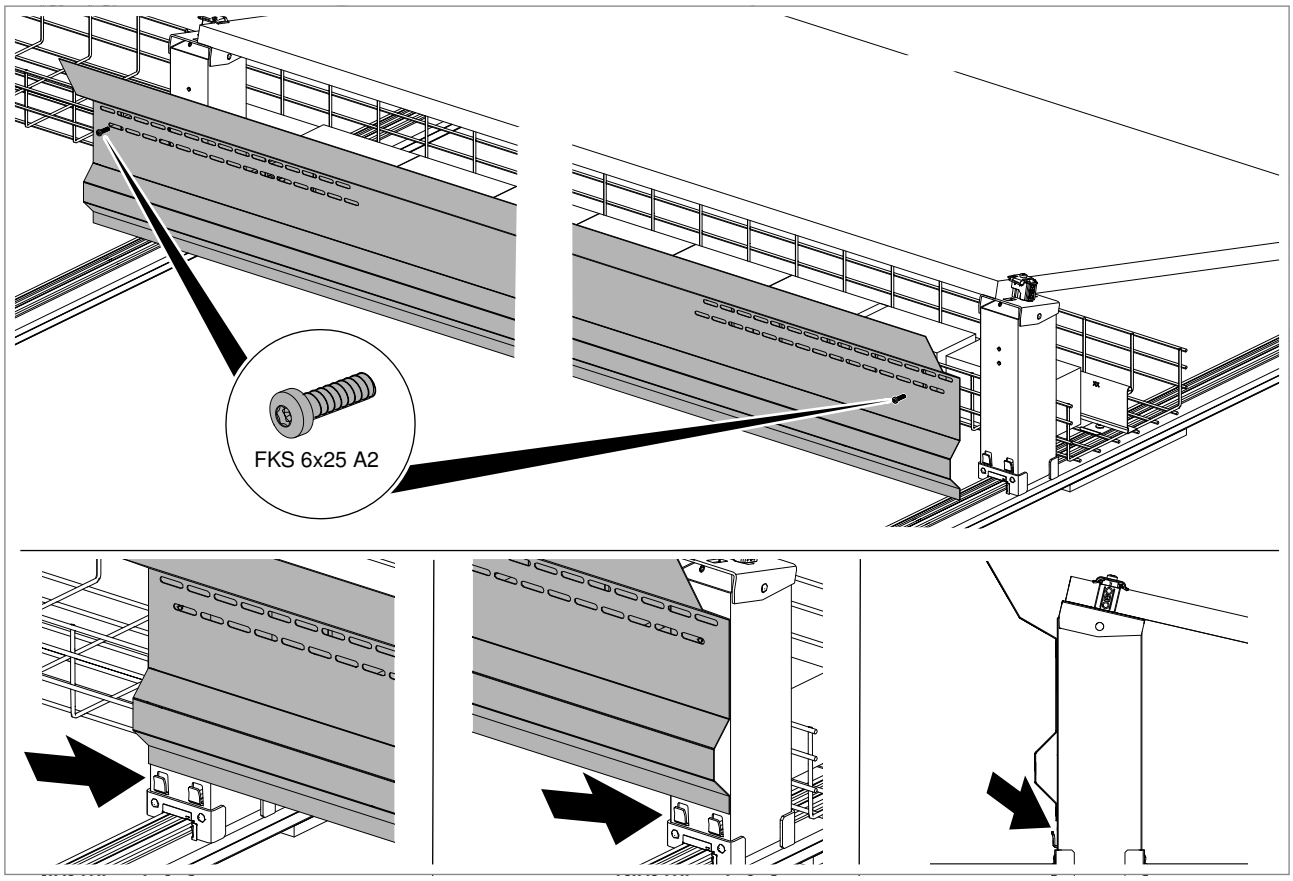

Abb. 73: Clamping the windbreak

1. Clamp the windbreak behind the straps on the rear side of the long supports.

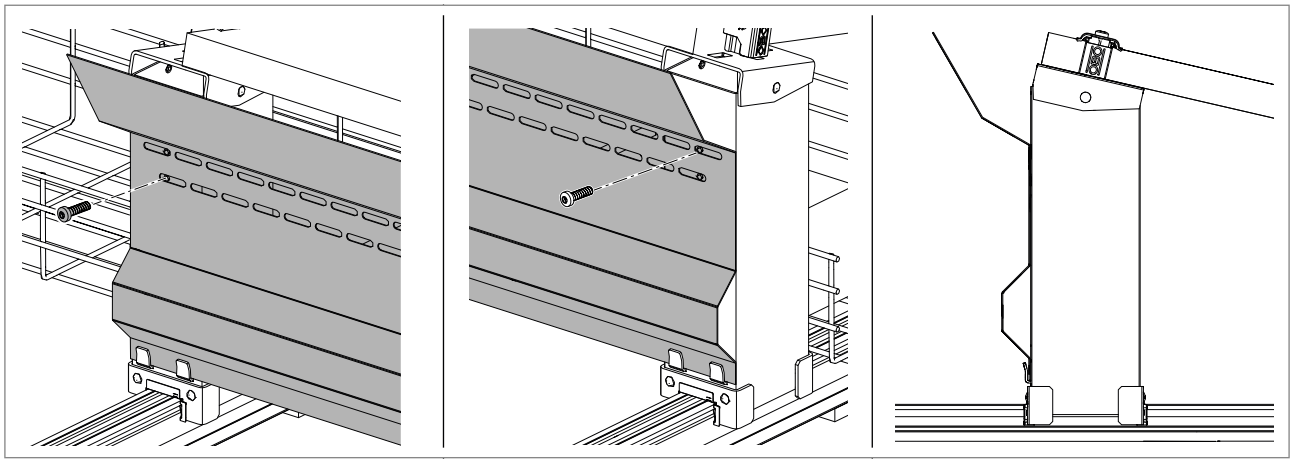

Abb. 74: Screwing on the windbreak

2. Screw the windbreak to long supports with FKS 6x25 screws (6 Nm), using the pre-drilled fastening holes.

6.13.2 Mounting windbreak WSB 2200 AD to supports STLS AD

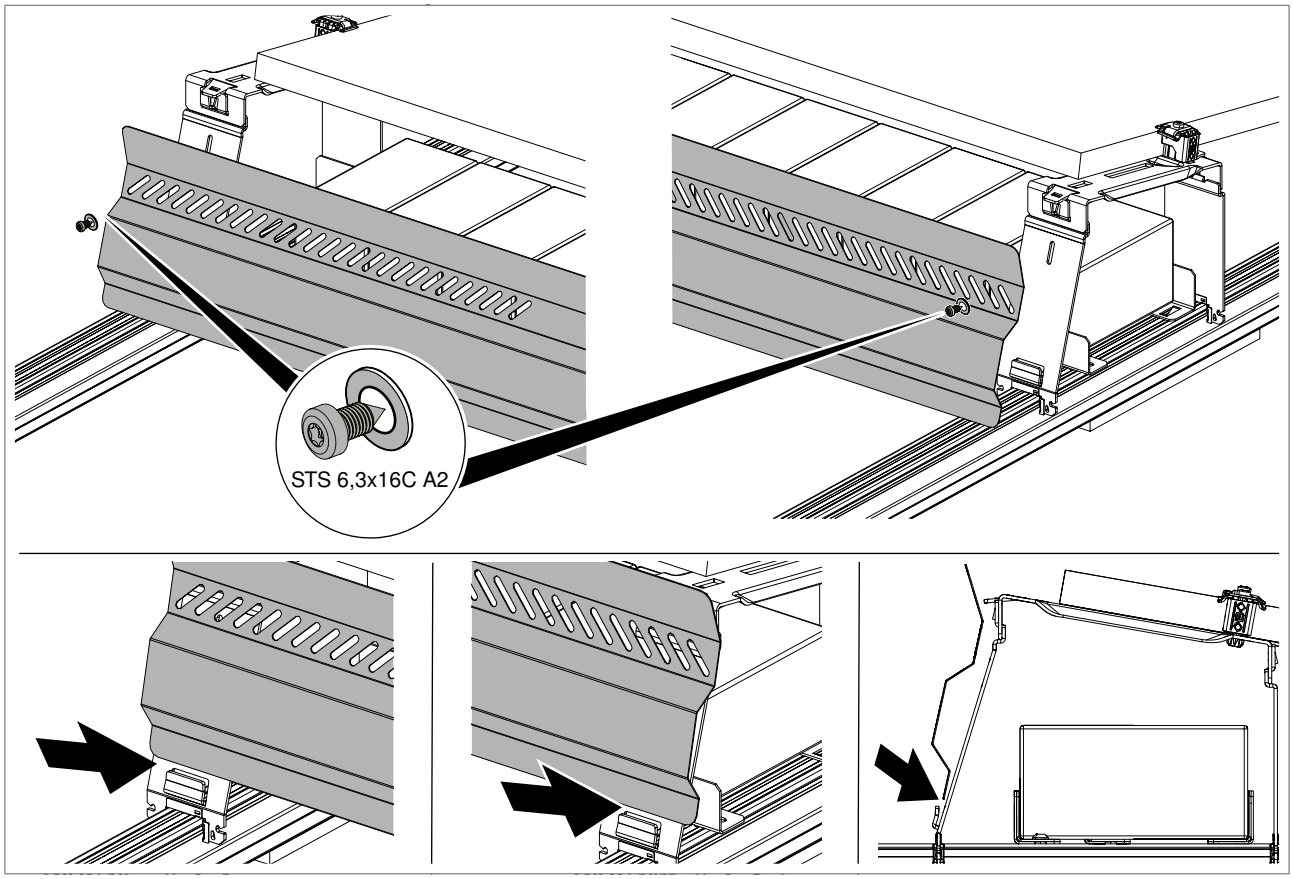

Abb. 75: Clamping the windbreak

1. Clamp the windbreak behind the straps on the rear side of the long supports.

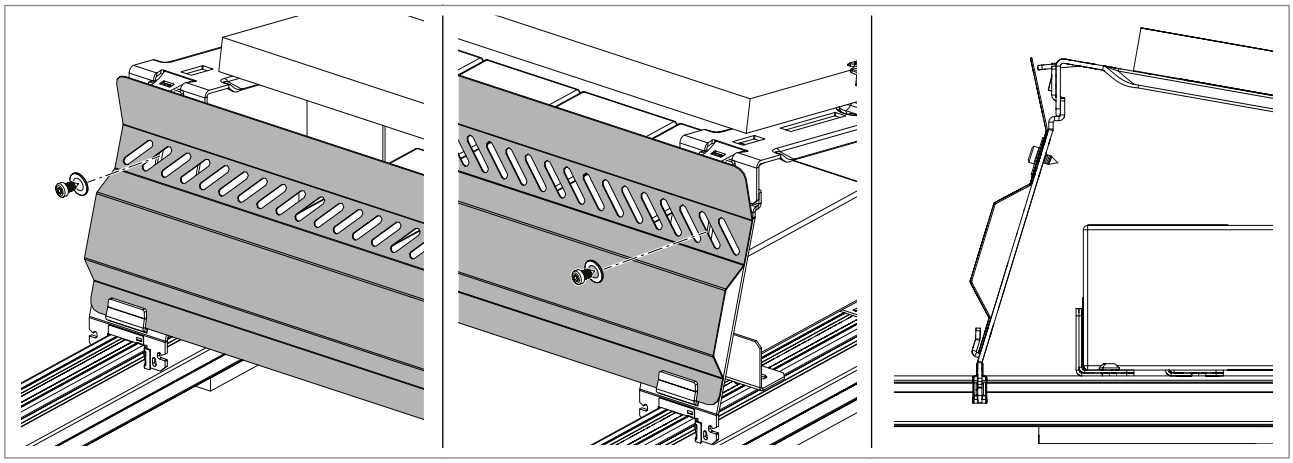

Abb. 76: Screwing on the windbreak

2. Screw the windbreak to long supports with STS 6.3x16C A2 screws and washers (e.g. WS M6 D12 A2) (6 Nm), using the pre-drilled fastening holes.

6.14 Integrating the system into the equipotential bonding and/ or lightning protection system

To ensure the safety of the PV system, it must be integrated into the equipotential bonding system If the risk analysis according to DIN EN 62305-2 requires an external lightning protection system for the building, and if the separation distance between the PV system and the lightning protection system cannot be maintained, then both of these systems must be interconnected so that they can carry lightning current.

The universal earthing clamp can be used for both applications. The individual truss profiles must be interconnected, in order to guarantee continuous, low-ohmic equipotential bonding.

A round conductor of ∅ 8–10 mm and/or an equipotential bonding conductor of 6–50 mm² can be mounted on the universal earthing clamp.

WARNING

Risk of electric shock!
In the event of a lightning strike in the lightning protection system, lethal voltages can occur in the system. Do not work on the lightning protection system during a thunderstorm or if there is the risk of one.

1. If the truss profile is anodised, the anodisation on the accessible contact services between the universal earthing clamp and the truss profile must be removed to ensure low-impedance contact.

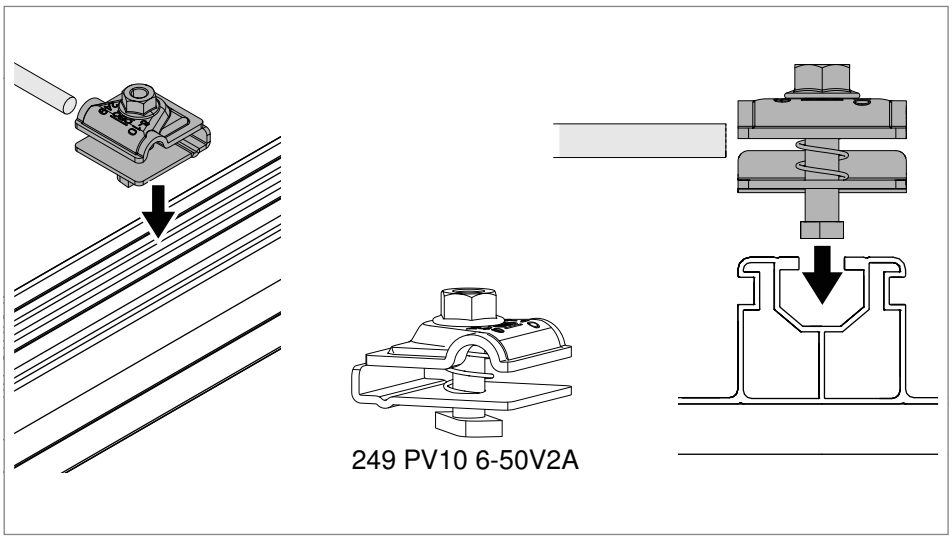

Fig. 77: Inserting the universal earthing clamp in the truss profile

2. Insert the hammerhead bolt of the universal earthing clamp in the truss profile.

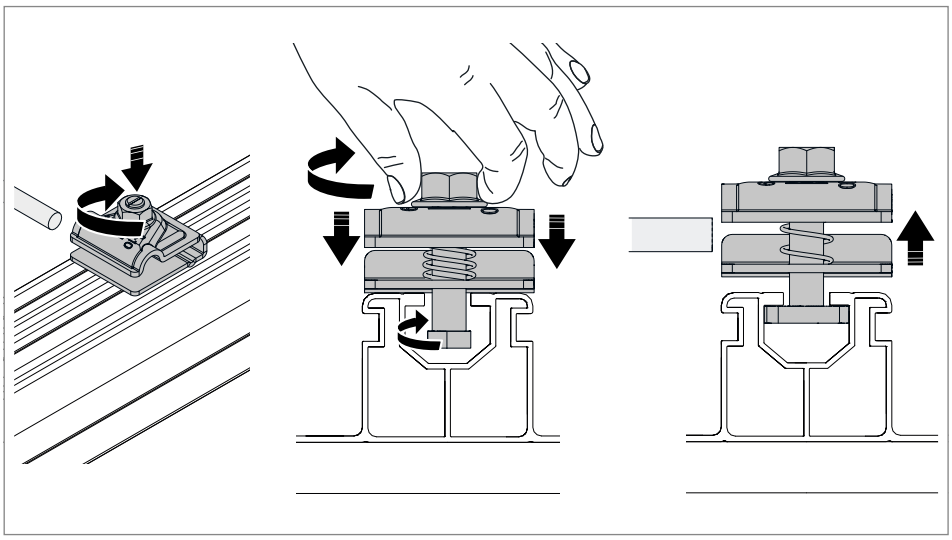

Fig. 78: Engaging the hammerhead bolt in the truss profile

3. Push the hammerhead bolt with spring downwards, turn it through 45° and release it. In so doing, ensure that the hammerhead is firmly engaged in the truss profile.

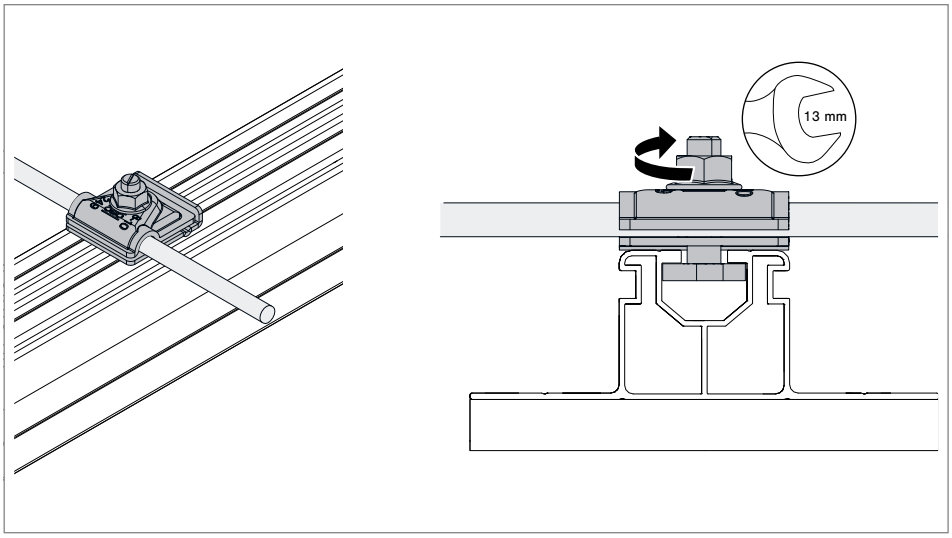

Fig. 79: Mounting the conductor in the universal earthing clamp

4. Insert the round conductor and/or equipotential bonding conductor.

5. Tighten the nut of the clamp with 15 Nm.

7 Maintaining the system

The PV mounting systems must be maintained once a year. Maintenance includes a visual inspection as well as the testing of different system components, repairing damage and removing impurities.

Visual inspection of the system

– Repair any obvious damage such as corrosion, deformations or cracks.

– Tighten the module fastenings, such as loose screws or clamps.

– Repair or replace worn materials, e.g. seals or fastenings.

– Check the number and condition of the ballast blocks and increase and/or replace if necessary.

– If installed, check the state and position of the building protection mats and repair them if necessary.

Check the fastening system

– Check the stability and secure positioning of the support structure and repair if necessary.

– Check the tightening torque of screws, nuts and connection elements and tighten if necessary.

– Check the wind and snow load protection and repair or replace if necessary.

Check the seals and corrosion protection

– Check the roof seal in the area of the fastening points and repair or replace if necessary.

– Identify any potential water entry points and seal if necessary.

– Check corrosion protection and repair if necessary.

Check the electrical components

– Perform a visual inspection of the cable paths and plug connections and repair if necessary.

– Repair any damage due to UV radiation, animals or mechanical loads.

– Ensure proper earthing of the mounting system.

Clean the system

– Eliminate any impurities that can negatively affect performance.

– If necessary, remove dirt and leaves from the support structure.

8 Dismantling the system

The PV mounting systems are dismantled in the reverse order to the mounting. The universal clamp cannot be dismantled without being destroyed. The long and short supports can be dismantled with a dismantling tool, which is included with the truss profiles. The Ballast support plates can be removed without tools.

8.1 Dismantling the supports

8.1.1 Dismantling supports STK/STL

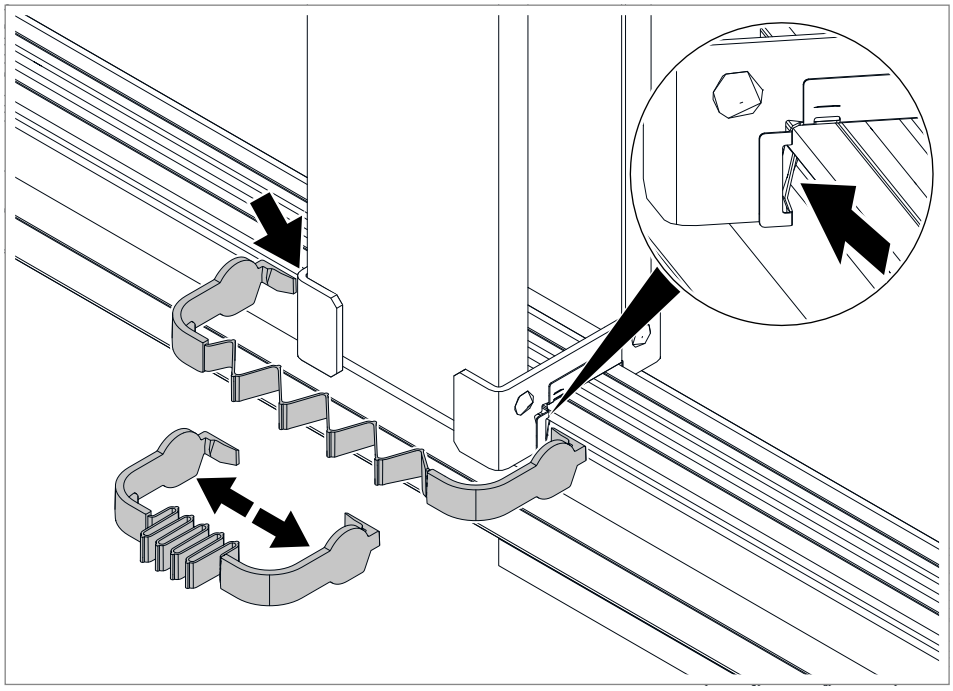

Fig. 80: Applying the dismantling tool

1. Pull the dismantling tool apart and apply it to the springs of the support.

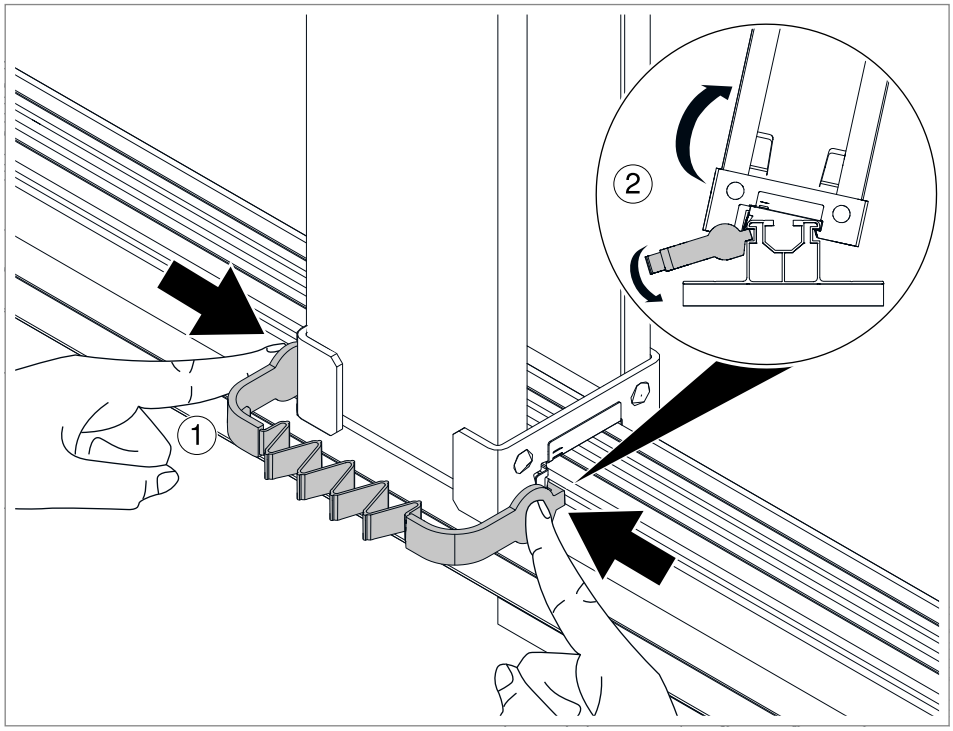

Fig. 81: Removing the support

2. Push the dismantling tool together ①.
3. Press down on the dismantling tool while tilting the support ② to open the springs.
4. Remove the support.

8.1.2 Dismantling supports STK AD, STLS AD and STLOW AD

Note! *Due to the size, dismantling the long supports STLS AD and STLOW AD requires two dismantling tools to be able to engage both the front and rear springs at the same time. Alternatively, a split dismantling tool can also be used.*

Dismantling support STK AD

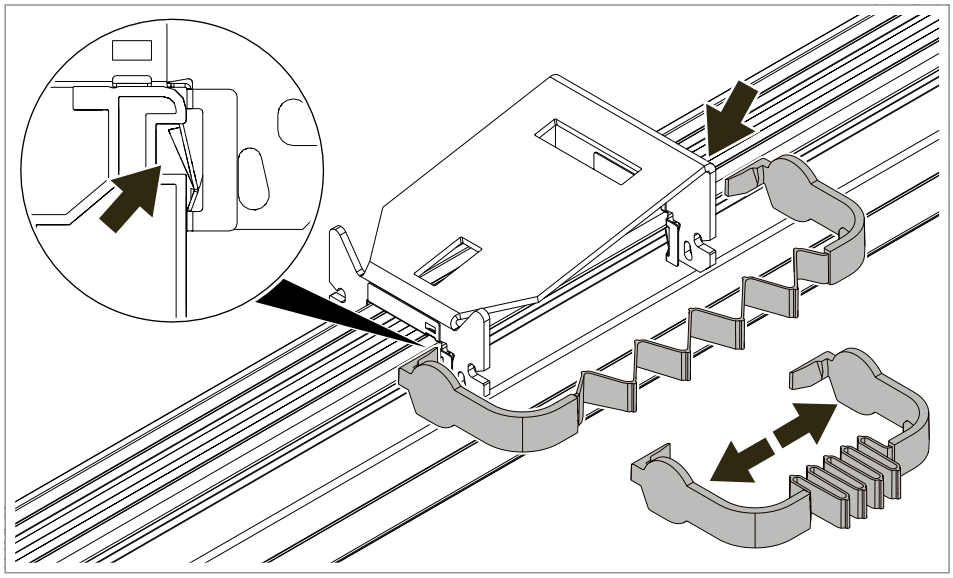

Fig. 82: Applying the dismantling tool

1. Pull the dismantling tool apart and apply it to the springs of the support.

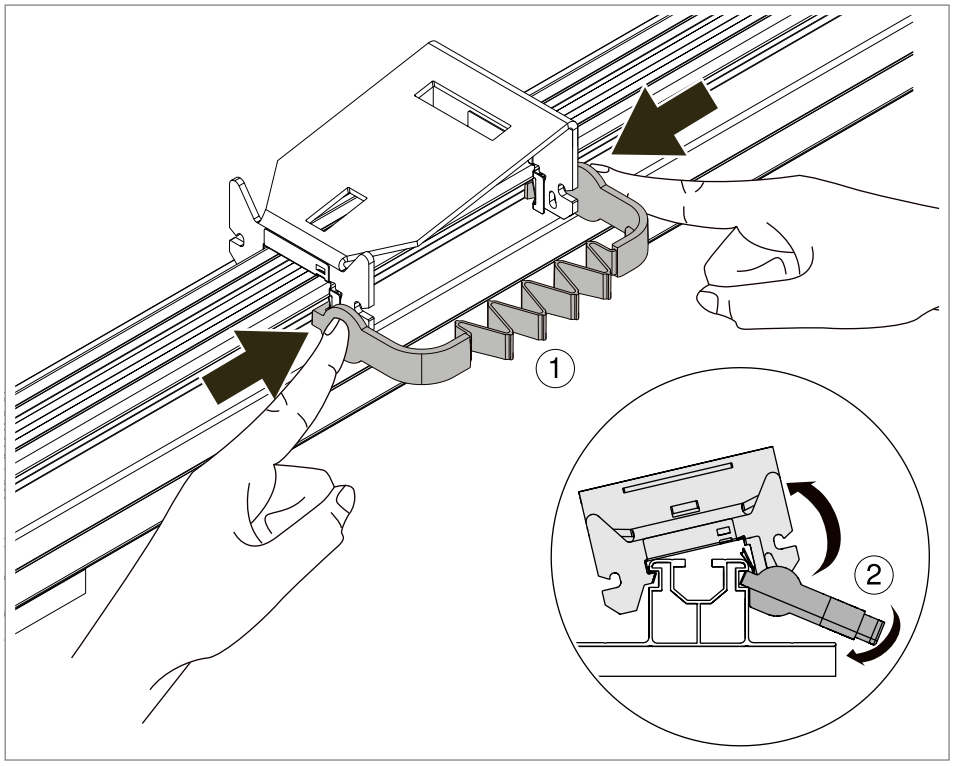

Fig. 83: Removing the support

2. Push the dismantling tool together ①.
3. Press down on the dismantling tool while tilting the support ② to open the springs.
4. Remove the support.

Dismantling support STLS AD

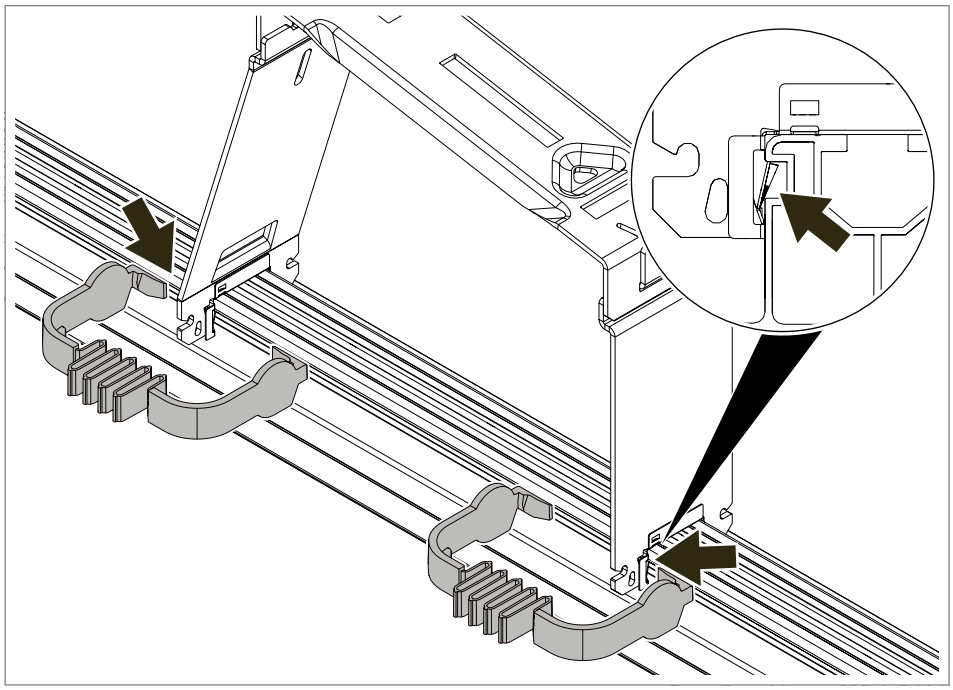

Fig. 84: Applying the dismantling tool

1. Apply the dismantling tool to the springs of the support.

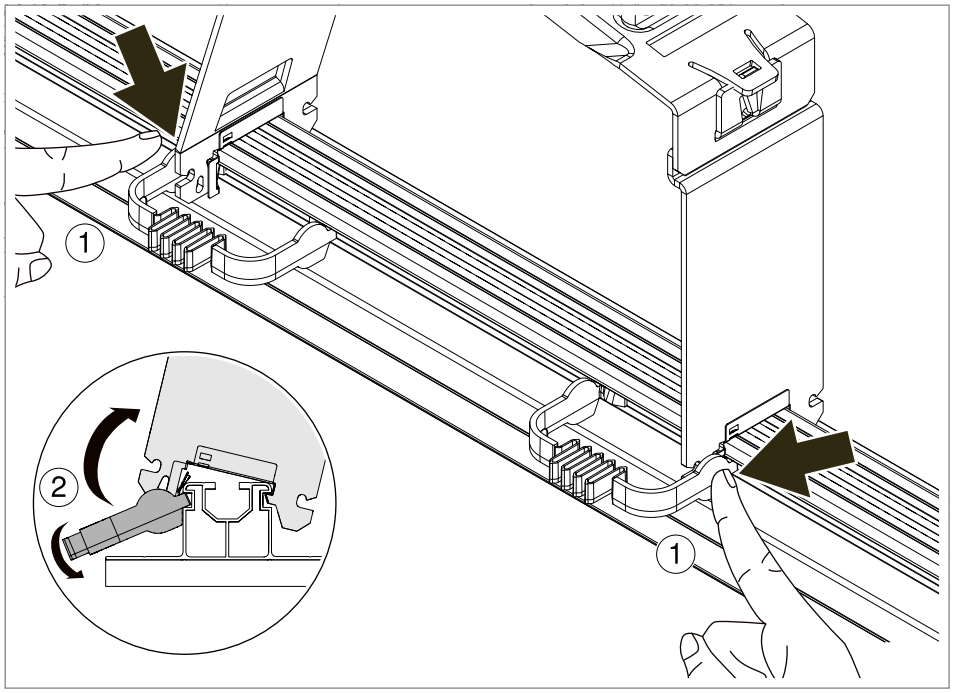

Fig. 85: Removing the support

2. Press in the dismantling tool ①.
3. Press down on the dismantling tools while tilting the support ② to open the springs.
4. Remove the support.

8.2 Dismantling the ballast support plate

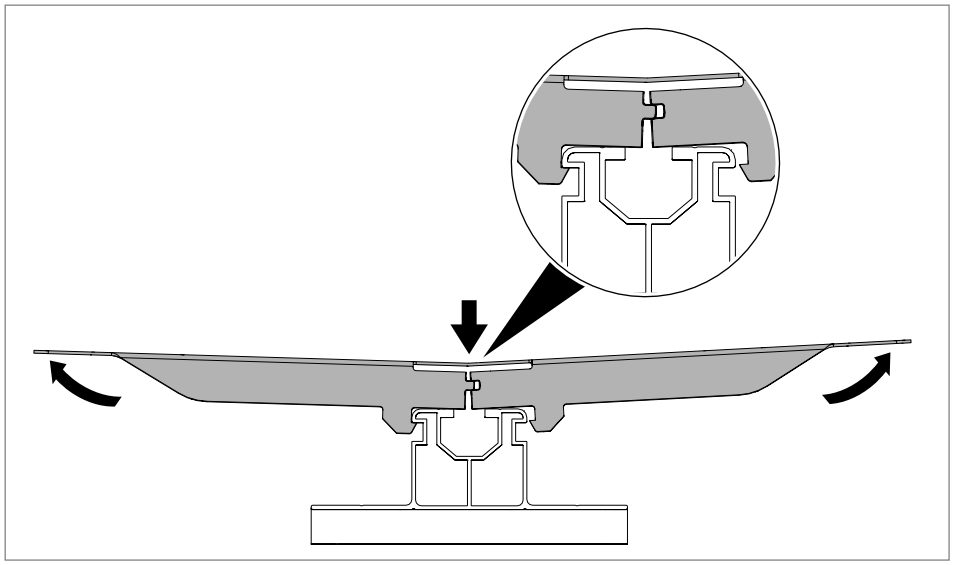

Fig. 86: Dismantling the ballast support plate

1. Bend up the ballast support plate slightly at the ends to remove it from the truss profile.

9 Disposing of the system

Comply with the local waste disposal regulations.

– Metal parts: As scrap metal

– Plastic parts/accessories: As plastic

– Packaging: As household waste/as metal (depending on packaging type)

10 Technical data

Additional parameters for straight connector LV 35 DD

Straight connector LV 35 DD suitable for indoor and outdoor areas. Releasable connection, not suitable for accepting a static mechanical load.

Lightning current carrying capacity for:

– TPF 35 5000 ALU / TPF 35 5000 ALU class H, in longitudinal arrangement

Designation	Type	Dimension mm	Material/surface	Item number
Truss profile, for flat-roof systems	TPF 35 5000 ALU	110 x 47 x 5,000	Aluminium	5900370
Short support for flat-roof systems	STK DD	86 x 166 x 107	Steel double dip	5901650
Long support for flat-roof system	STL 15 DD	86 x 166 x 300	Steel double dip	5901655
Short support for flat-roof systems	STK AD DD	126.5 x 51.7 x 80	Steel double dip	5901660
Long support for flat-roof system	STLS AD DD	306.8 x 242.2 x 80	Steel double dip	5901665
Long support for flat-roof system	STLOW AD DD	283.1 x 80 x 237.9	Steel double dip	5901667
Universal clamp, for flat-/pitched-roof system	KLU A2	41 x 42 x 79	Stainless steel A2	5901010
Universal clamp, for flat-/pitched-roof system	KLU A2 S	41 x 42 x 79	Stainless steel A2 black	5901012
End clamp with spring	KLE F 25 A2 KLE F 30 A2 KLE F 35 A2 KLE F 40 A2	56 x 46 x 48 56 x 46 x 53 56 x 46 x 58 56 x 46 x 63	Stainless steel A2	5901092 5901093 5901094 5901095
Intermediate clamp with spring	KLZ F 25 A2 KLZ F 30 A2 KLZ F 35 A2 KLZ F 40 A2	50 x 40 x 48 50 x 40 x 53 50 x 40 x 58 50 x 40 x 63	Stainless steel A2	5901062 5901063 5901064 5901065
Mesh cable tray	GRM 55 200 FT GRM 55 300 FT GRM 55 400 FT GRM 55 500 FT GRM 55 600 FT	55 x 200 x 3,000 55 x 300 x 3,000 55 x 400 x 3,000 55 x 500 x 3,000 55 x 600 x 3,000	Hot-dip galvanised steel	6001420 6001424 6001428 6001432 6001436
Mesh cable tray	GRM 105 200 FT GRM 105 300 FT GRM 105 400 FT GRM 105 500 FT GRM 105 600 FT	105 x 200 x 3,000 105 x 300 x 3,000 105 x 400 x 3,000 105 x 500 x 3,000 105 x 600 x 3,000	Hot-dip galvanised steel	6002435 6002437 6002439 6002443 6002445
Fastening set for mesh cable trays for flat-roof systems	BF GR	60 x 40 x 20	Hot-dip galvanised steel	5901770
Ballast rail	BS DD	1765 x 40 x 53,3	Steel double dip	5901686
Ballast support plate	BTP 35 DD	304 x 51 x 25.5	Steel double dip	5901674

Designation	Type	Dimension mm	Material/surface	Item number
Barrier strip	TSG 45 DD	45x2995	Steel double dip	6062321
Barrier strip	TSG 85 DD	85 x 2,995	Steel double dip	6062331
Barrier strip connec-tor, for all barrier strip side heights	TSGV A2	60 x 20 x 15	Stainless steel A2	6067970
Hold-down clamp for mesh cable tray, for barrier strip fastening	KS GR A2	41.5 x 26	Stainless steel A2	6062282
Universal earthing terminal PV	249 PV10 6-50V2A	43 x 40 x 34	Stainless steel A2	5051520
Straight connector for truss profile	LV 35 DD	44.4 x 36.4 x 160	Steel double dip	5901210
Windbreak for flat-roof systems	WSB 2200 DD	44 x 372 x 2,200	Steel double dip	5901610
Windbreak for flat-roof systems	WSB 2200 AD DD	21 x 205.5 x 2,200	Steel double dip	5901618
Flat-head screw for windbreak	FKS 6x25 A2	Ø 12 x 30	Stainless steel A2	5901880
Screw, self-tapping	STS 6.3x16 C A2	Ø 6.3 x 16	Stainless steel A2	5901875
Distance gauge	AASL FD	1,570 x 127 x 67	Aluminium	5901620
Dismantling tool	Does not need to be ordered separately, included with the truss profiles			

Tab. 3: Technical data

OBO Bettermann Holding GmbH & Co. KG
P.O. Box 1120
58694 Menden
GERMANY

Technical Office
Tel.: +49 (0)2373 89-1300

technical-office@obo.de

www.obo-bettermann.com

Date 10/2026

261006.02

Building Connections

OBO BETTERMANN